CASING RUNNING TOOL

by MCCOY

DWCRTII Manual

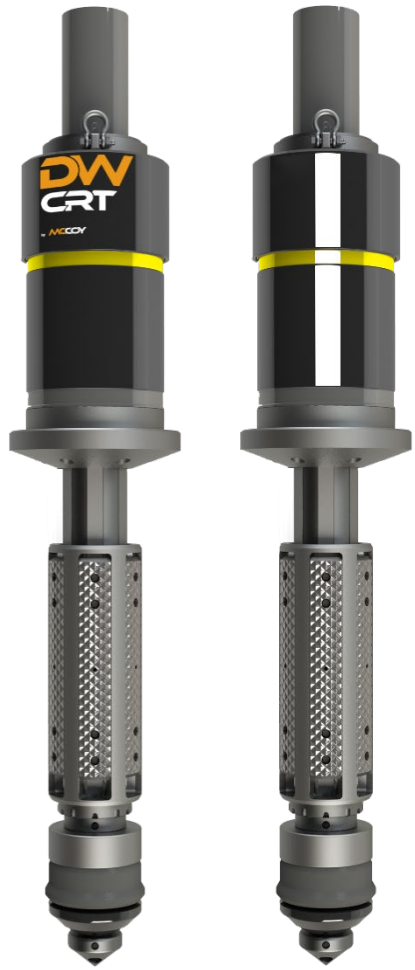

Document Number: MAN-DW-706
Project Name: DWCRT II
Internal Size: 4-1/2"-20" 450 Ton, 7"-26" 1000 Ton
External Size: 4-1/2" – 7-5/8"

Section 1 - Contents

Section 1 - Contents **2**

Section 2 - Introduction **5**

2.1 DWCRT Description 5

2.2 Terms and Definitions 7

Section 3 - McCoy Customer Service **9**

Section 4 - Safety Requirements **10**

4.1 Recommended Tools 10

4.2 Identification Numbers 10

4.3 Limited Warranty 10

Section 5 - DWCRT Training Outline **11**

Section 6 - DWCRT General Information **12**

6.1 General Information 12

6.2 Tension vs. Torque Capacities 13

Section 7 - Operational Procedures **17**

7.1 DWCRT Operational Positions 17

7.2 Rig Up Procedure 18

7.3 Stump Test Procedure 19

7.4 Setting Procedure (Activating the Slips) 19

7.5 Unsetting Procedure (Releasing the Slips) 19

7.6 Connection Make-up with Conventional Tongs 20

7.7 Running the DWCRT to Reciprocate, Rotate and Make-Up Casing 20

7.8 Using the DWCRT to Back Out a Joint of Casing 20

7.9 Running the DWCRT to Drill with Casing 20

7.10 Fill-Up Procedures with DWCRT 21

7.11 Circulating Procedures with DWCRT 21

7.12 Rig Down 21

7.13 Operating Specifications 22

7.13.1 DWCRT Load Rating 22

7.13.2 DWCRT Torque Rating 23

Section 8 - Packer Cups and Gage Rings **24**

8.1 Packer Cups 24

8.2 Gage Rings 24

Section 9 - DWCRT Lubrication and Maintenance **25**

9.1 DWCRT Spring Replacement Guide 26
9.2 Results of Inspections 26
9.3 Recommended Lubrication 27
9.3.1 Stocking Quantity 27
9.4 DWCRT Inspection Chart 29
9.4.1 Head Assembly 29
9.4.2 Internal Assembly 30
9.4.3 External Assembly 31
9.4.4 Slip Teeth Inspection Criteria 32
Section 10 - Assembly – BOMs 33
10.1 DWCRT Assembly 33
10.1.1 Head Assembly, 500 Ton 35
10.1.2 Head Assembly Shorty, 500 Ton 37
10.1.3 DWCRT 1,000 Ton Assembly 39
10.1.4 Head Assembly, 1,000 Ton 41
10.2 Internal Gripping Assembly, 4-1/2” – 20” 43
10.3 Internal Gripping Assembly, 7” – 26” 56
10.4 External Grip Assembly, 4-1/2” – 7-5/8” 63
10.5 Bell Guide Assembly, 5-1/2” 65
10.6 Bell Guide Assembly, 7” 66
10.7 Bell Guide Assembly, 7-5/8” 67
10.8 Internal Circulating Assemblies 68
10.8.1 Internal Circulators, 4-1/2” – 6-5/8” 68
10.8.2 Internal Circulators, 7” – 7-5/8” 72
10.8.3 Internal Circulators, 8-5/8” – 13-3/8” 74
10.8.4 Internal Circulators, 9-5/8” – 13-3/8” 76
10.8.5 Internal Circulators, 16” – 20” 78
10.8.6 Internal Circulators, 22” – 26” 79
10.9 External Circulator Assembly 80
10.9.1 External Circulator Cartridge Assembly, 4-1/2” – 5” 82
10.9.2 External Circulator Cartridge Assembly, 5-1/2” – 6-5/8” 83
10.9.3 External Circulator Cartridge Assembly, 7” – 7-5/8” 84
Section 11 - DWCRT Assembly Tools 85
11.1 Internal Assembly Tools 85
11.2 Internal 1K Tools 86
11.3 External Assembly Tools 87

Section 12 - Assembly - Head **88**
Section 13 - Assembly – Internal Grip **99**
Section 14 - Assembly – Internal Circulator **104**
14.1 4-1/2” to 5” Circulator Assembly 104
14.2 5-1/2” Circulator Assembly 104
14.3 7” & 7-5/8” Circulator Assembly 105
14.4 8-5/8” to 13-3/8” Circulator Assembly 105
14.5 16”-20” Circulator Assembly 105
14.6 9-5/8” & 13 3/8” Circulator Assembly (1000 Ton) 106
14.7 16”-20” Circulator Assembly (1000 Ton) 106
14.8 22”-26” Circulator Assembly (1000 Ton) 106
Section 15 - Assembly – External Grip **107**
Section 16 - Troubleshooting **125**
16.1 Rigging Up the DWCRT 125
16.2 Engaging the DWCRT 125
16.3 Disengaging the DWCRT 126
16.4 Backing Out Casing with the DWCRT 128
Section 17 - Customer Feedback Form **129**

Appendices

Appendix 1.1: Size and Ratings **1150**
Appendix 1.2: DWCRT Valve Options **1183**
Appendix 1.3: Hoisting Capacity Reduction with Pressure **119**
Appendix 1.4: Minimum Set Torque **1205**
Appendix 1.5: Bolt and Set Screw Torque **1216**
Appendix 1.6: Tool Joint Sizes and Make-up Torque **1227**
Appendix 1.7: Packer Cup, Gage Ring, Thimble Size Chart **1238**

Section 2 - Introduction

2.1 DWCRT Description

The McCoy Casing Running Tool (DWCRT) by McCoy is a mechanically operated Casing Running Tool that attaches to the Top Drive quill and uses controlled movements of the Top Drive to rotate and reciprocate the Casing for makeup/breakout operations, hoisting, as well as DWC and cementing operations. Using this tool displaces the need for a tong, fill and circulate equipment, and conventional hoisting elevators.

The tool's operating temperature range is between -40°F to 180°F. The main components of DWCRT are shown in the figure below:

Head Assembly: Mechanical device that converts rotation from the Top Drive into axial movement of the Gripping Actuator or Mandrel. It can include an optional compensator (which allows unrestricted axial movement of the CRT to make up thread loss or gain when making-up or breaking-out connections) to assist on setting or releasing the tool in a controlled manner.

Gripping Assembly: Used to connect with Head Assembly to transmit axial and rotational movement generated from Top Drive to the Casing. Available in external or internal grip for a variety of Casing diameters and weights.

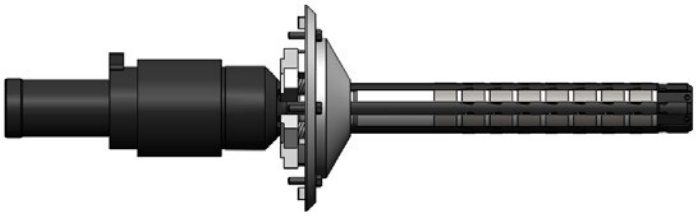

Circulator Assembly: Seal Guide Assembly has optional mud valve. This keeps pressurized mud below the Gripping Assembly and contained in the ID of the Casing, allowing for operations where circulating is required.

DWCRT Assembly: CRT Assembly is made up of Head, Gripping and Circulator Assembles. Figure below provides more detail of parts that go into making DWCRT. Refer to Assembly – BOMs section for more details.

NOTE:
All illustrations and figures in this manual are for illustrative purposes. Details shown may not represent all surface features of the actual tool.

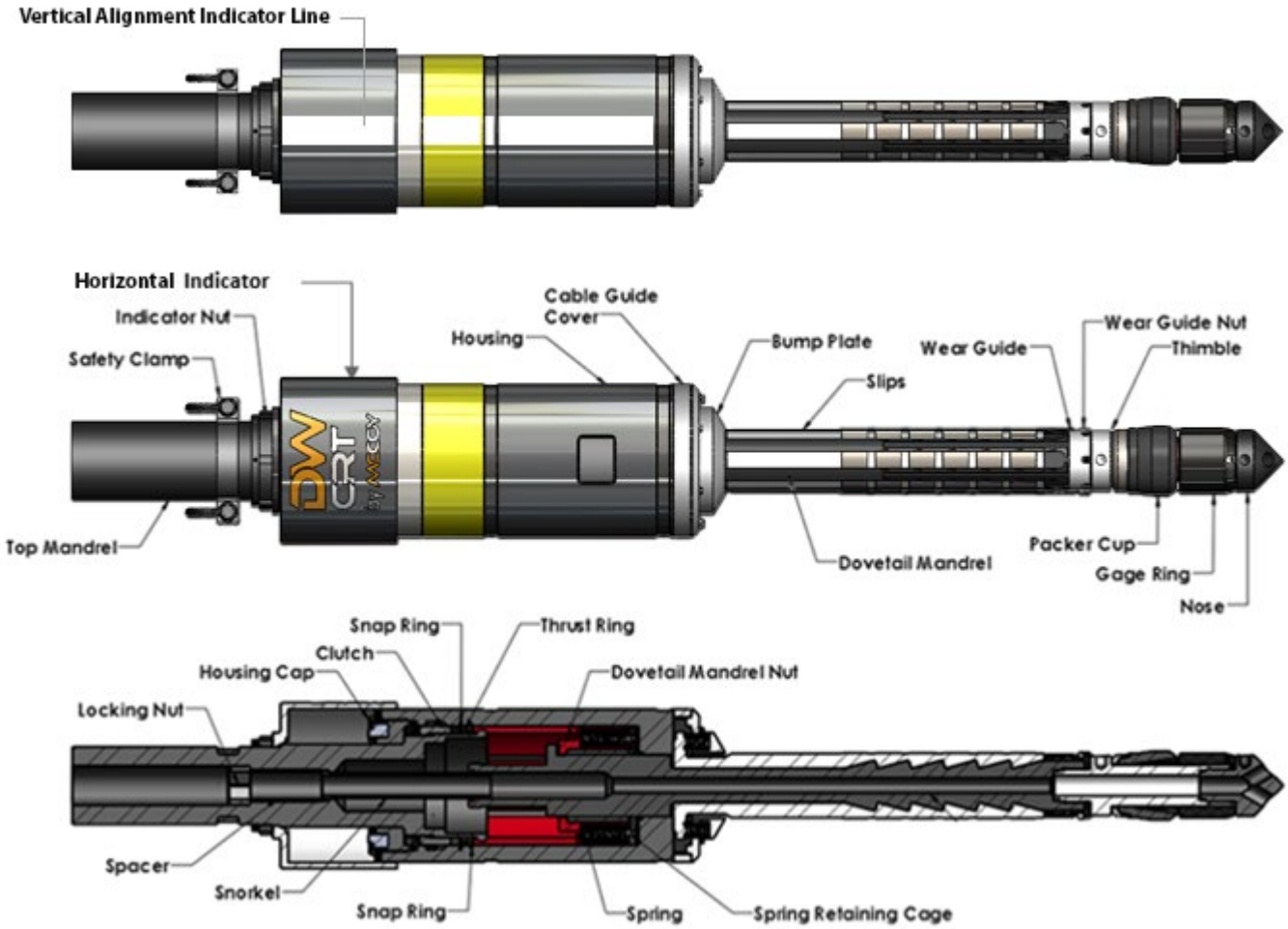

NOTE: Safety Clamp, Cable Guide and Cable Guide Cover are standard options with all our DWCRT's. They can be removed upon request.

2.2 Terms and Definitions

- Bail Extensions – Second set of bails places in series with the drilling bails to extend the overall length of the bail assembly. Necessary to avoid interference between the CRT and elevators.
- Base Slips – Intermediate tapered segment in the gripping assembly that retains the Slips (Dies).
- Bell Guide - External pipe guide on the External Gripping Assembly used to guide the pipe into the tool. Creates friction to resist rotation on the tubular when setting and unsetting the tool.
- Break Out – The process of unthreading the casing connection typically counter clock-wise.
- Bridge - Downhole obstruction that resists casing being advanced into the well.
- Bump Plate - Sacrificial component mounted to the bottom of the housing to create friction between the CRT and the tubular for connection make-up
- Circulate - Pumping mud under pressure inside the casing.
- Circulating Assembly - Sub assembly of the CRT that provides a means for sealing internally of the tubular to allow fluid to be pumped into the casing or to receive pressurized mud returns.
- Clutch - Component of Head Assembly used to prevent incremental torque make-up during rotation.
- Dovetail Mandrel – Primary component of the Internal Gripping Assembly that moves axially to set and unset the Slips (Dies).
- Fill Up - Pumping mud inside the casing while it is not pressurized.
- Floor Slips - Device used to hold the tubular at the rig floor, flush mount spider, hand slips,
- Gage Ring - Metal Back Up plate to support the packer cup allowing for higher fluid pressures to be pumped through the CRT.
- Grabber Box (tool handler, tool joint handler)– External tool joint clamp below the top drive quill used to react top drive torque for make-up or break-out of tool joints.
- Gripping Assembly – Sub assembly of the CRT that uses axial movement of relative members to grip and release the tubular, can be configured to grip the internal or external of the tubular.
- Head Assembly – Common sub assembly of the CRT assembly used to selectable transmit top-drive rotation into axial movement of the Gripping Assembly for selective grip or release of a tubular
- Housing – Main body of the Head Assembly that contains the drive components necessary for setting and unsetting of the CRT.
- Indicator - External cover that exposes yellow and white bands on the housing to indicate if the tool is in the lock or unlocked position.
- Inserts - Interchangeable components mounted to the base slips that have teeth to engage the casing.
- Lift Nubbin – Upset installed into a threaded connection of a flush joint tubular, designed to lift the tubular with an elevator.
- Locked Position – Position of the Head Assembly to prevent axial movement of the gripping assembly from the Set to Unset position, identified with white exposed under the Indicator.
- Lower Housing – Component of the External Bell Assembly that houses the Ramp Segments
- Make Up - The act of threading together the casing connection (typically clockwise).
- Packer Cup - Elastomer component of the Circulating Assembly that utilizes an interference fit to create a seal.
- Packer Saver (seal guide, packer cup guide)- Beveled entry guide installed into the tubular threaded connection to guide the CRT into the tubular ID. Designed to prevent rips and tear in the packer cup from sharp edges or rig misalignment.
- Reciprocate - The process of lifting and lowering the casing string to work it through a bridge or into a long lateral

- Rig down - Removing the CRT from the top drive.
- Rig up – Installing the CRT onto the top drive.
- Rotary Table – Mechanical device on a drilling rig that provides rotation or resist rotation and supports the drill string when the top drive does not.
- Safety Swivel (safety cable attachment, safety ring, swivel ring) - Rotary ring on the Top Mandrel intended for a secondary retention point.
- Set – a state when the CRT is gripping the casing
- Slips (dies) – Component of the Gripping Assembly that moves radially to grip the tubular, could have teeth or lugs, identified by a tapered surface.
- Snorkel – Internal mud tube passage between the Top Mandrel and the Dovetail Mandrel, preventing mud from contaminating the internal components of the Head Assembly.
- Stabbing Guide -Beveled entry used to assist placing the threaded connection into the mating connection, installed prior to stabbing and removed before casing make-up.
- Stump Guide – Aluminum plate placed between the pin and box when activating the CRT to prevent casing thread damage. Commonly used when a high amount of set down weight is required to activate the CRT.
- Thimble – Sacrificial component of the Circulator Assembly that centralizes the tool prior to the packer cup entering the ID of the casing.
- Top Mandrel – Component of the Head Assembly that connects to the Top Drive using a tool joint connection.
- Unlocked Position – Position of the Head Assembly that allows the Gripping Assembly to be moved axially to set or unset the tool, indicated by some or no yellow exposed under the indicator.
- Unset – a state when the CRT is completely released from the casing
- Upper Housing – Component of the External Bell Assembly
- Vertical Indicator Line – Line on the Housing and Indicator that identifies when the tool is completely unset.
- Wear Guide - Sacrificial surface that allows the Slips or Inserts to be retracted behind the Wear Guide preventing the teeth from contacting the tubular during insertion or removal.

Section 3 - McCoy Customer Service

Congratulations, and thank you for purchasing quality tubular connection equipment from McCoy Global. This unit will provide years of outstanding performance. Proper maintenance and care will extend its life and ensure years of excellent service and reliability. The installation and commissioning, operating, and maintenance instructions in this manual will assist you in giving your equipment the care it requires. Please read the manual before installing and using your equipment. Replacement parts are readily available from McCoy Global. Should you need replacement parts, or should you experience any difficulty not covered in this manual, please contact:

McCoy Global Canada

14755 121A Avenue
Edmonton, Alberta, Canada
T5L 2T2

Phone: 780.453.3277
Fax: 780.455.2432

McCoy Global USA

4225 HWY 90 East
Broussard, LA USA
70518

Phone: 337.837.8847
Fax: 337.837.8839

McCoy Global S.A.R.L

Warehouse No. FZS1BJ03
Jebel Ali Free Zone - South Zone
Dubai, United Arab Emirates

Phone: +971.4803.6900
Fax: +971.4803.6909

McCoy Global USA - Austin

1300 Arrow Point Drive
Cedar Park, TX USA
78613

Phone: 1.512.610.5200
Fax: 1.512.610.5201

Email Sales: sales@mccoyglobal.com

www.mccoyglobal.com

Technical manuals are produced and published by McCoy Global Inc. McCoy Global has made an effort ensure that all information in this document is accurate and current, but please note that some illustrations used in this manual may not visually match actual purchased equipment. If you believe information in this publication is missing or erroneous, please contact our Technical Publications Department.

Standard Terms and Conditions of Sale (including warranty information):

https://www.mccoyglobal.com/download/terms-conditions-sales/

Section 4 - Safety Requirements

McCoy equipment is typically installed and operated in a controlled drilling rig environment involving hazardous situations. Only authorized, trained, and competent personnel shall operate, maintain, and repair this equipment. Appropriate procedures and protocols should be established to address hazards and situations that may arise.

Fully review this manual and comply with all safety and environmental protection instructions before operating equipment.

4.1 Recommended Tools

Assembly and Maintenance operation may require the use of tools designed specifically for the purposes, refer to DWCRT Assembly Tools section for tool details. McCoy recommends that only the specified tools be used, and used as intended, to ensure personal safety.

4.2 Identification Numbers

All McCoy primary load carrying parts are engraved with part and serial numbers. Since McCoy parts are modular, no identification number exists for the complete assembly. When documenting maintenance, be sure to include all applicable serial numbers of individual parts.

4.3 Limited Warranty

The limitations outlined by this manual are for ideal operating conditions. The limits of the tool may be further reduced by less than ideal conditions, and it is up to the equipment operator or technician to determine a safe operating limit for each scenario.

For claims against warranty, documentation, digital documentation of rig operating parameters, and load applied to the tool should be provided (such as a Pason report).

Standard Terms and Conditions of Sale (including general warranty information) may be viewed here:

https://www.mccoyglobal.com/download/terms-conditions-sales/

Section 5 - DWCRT Training Outline

McCoy requires that users receive a training course before the use or maintenance of the DWCRT.

The following is an example course outline of the topics covered.

1. DWCRT Introduction
   a. Overall Explanation of the tool (mechanical, modular)
      i. Handout manual
   b. Show parts of the tool (Head, Dovetail Mandrel, Wear Guides)
   c. Basic operation (set and release)
2. DWCRT Assembly and Disassembly
   a. Assembly Tools
   b. Assembly Video – hands-on disassembly
      i. Show inspection points and key components (seals, wear items, seal areas)
      ii. Lubrication
   c. Circulator Assembly
      i. Show parts and how to select Packer Cups and Gage Rings
      ii. Check for wear on Packer Cup
   d. Pre-job checklist for assembling tool
3. DWCRT Procedures
   a. Using with Casing Tongs
   b. Using without Tongs
   c. Fill-up only
4. DWCRT Capacity and Modular Parts
   a. Ratings
   b. Flowrates
   c. Valve options
   d. Space out
   e. Wear Guides, Bump Plates, Slips and Inserts
5. DWCRT Maintenance Schedule
   a. Category I
   b. Category II
   c. Category III
   d. Category IV
6. DWCRT Calculations
   a. Reduced reciprocate ratings
   b. Unlocked torque limits
   c. Max tension and torque to keep from damaging Casing
   d. Recommended set torque
   e. Test

Section 6 - **DWCRT General Information**

6.1 General Information

DWCRT represents a new generation of Casing Running Tools. It is a mechanical tool with modular design which meets design requirements of the API 8C standard. The DWCRT is designed to make up Casing, run it in the well, and provide rotation, reciprocation, and circulation. Minimal Top Drive set down weight is required to activate the tool. The compensating locking mechanism allows Slips to be set with low torque with easy release and the ability to achieve high torque for making Casing joints.

6.2 Tension vs. Torque Capacities

The graphs below provide rated Tension vs. Torque capacities for various sizes of DWCRT. Please use the correct load capacity limits for your application. If you have any questions, please contact McCoy.

- Blue line - DW Operation Load

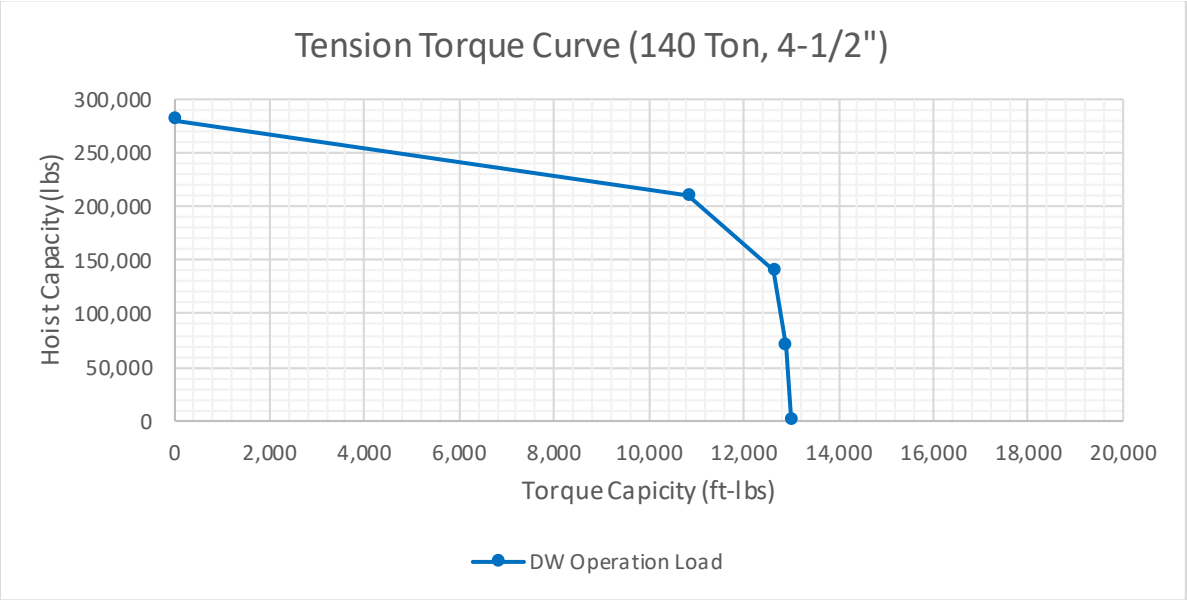

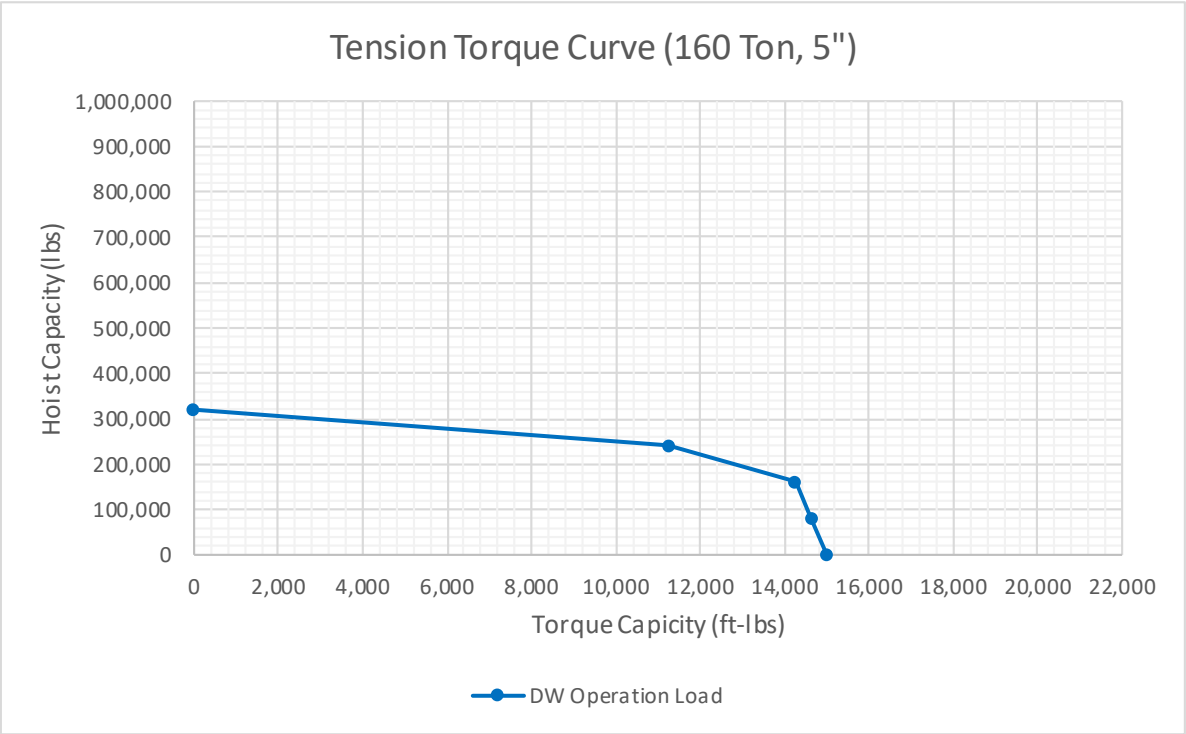
Tension Torque Curve (160 Ton, 5")
1,000,000
900,000
800,000
700,000
600,000
500,000
400,000
300,000
200,000
100,000
0
Hoist Capacity (lbs)
0
2,000
4,000
6,000
8,000
10,000
12,000
14,000
16,000
18,000
20,000
22,000
Torque Capicity (ft-lbs)
DW Operation Load

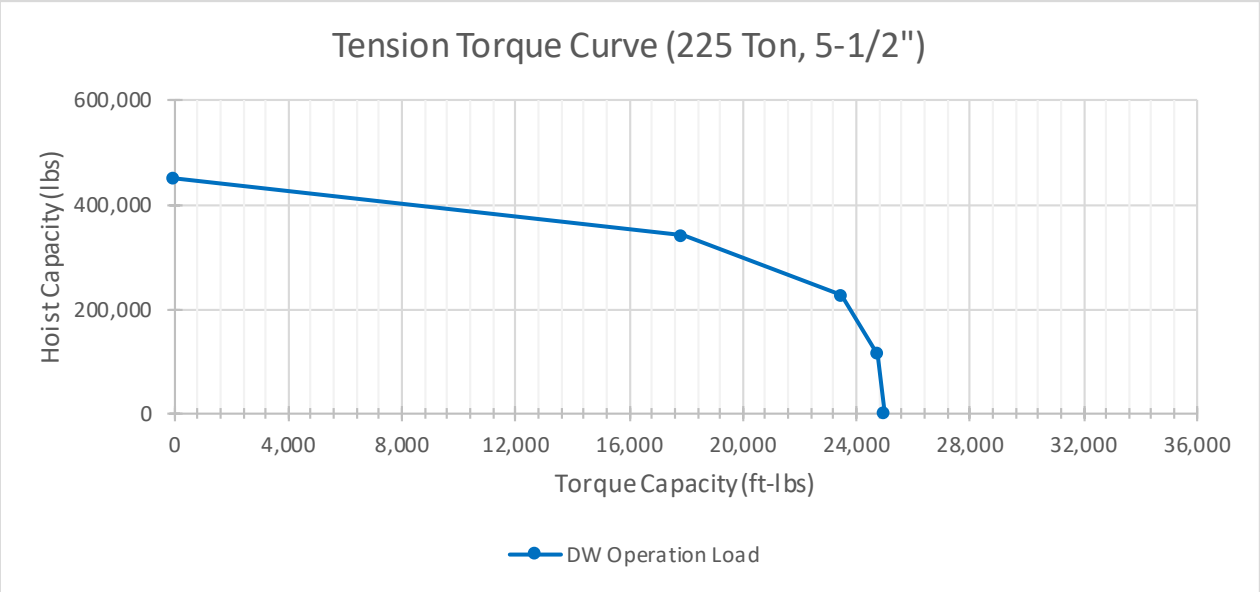
Tension Torque Curve (225 Ton, 5-1/2")
600,000
400,000
200,000
0
Hoist Capacity (lbs)
0
4,000
8,000
12,000
16,000
20,000
24,000
28,000
32,000
36,000
Torque Capacity (ft-lbs)
DW Operation Load

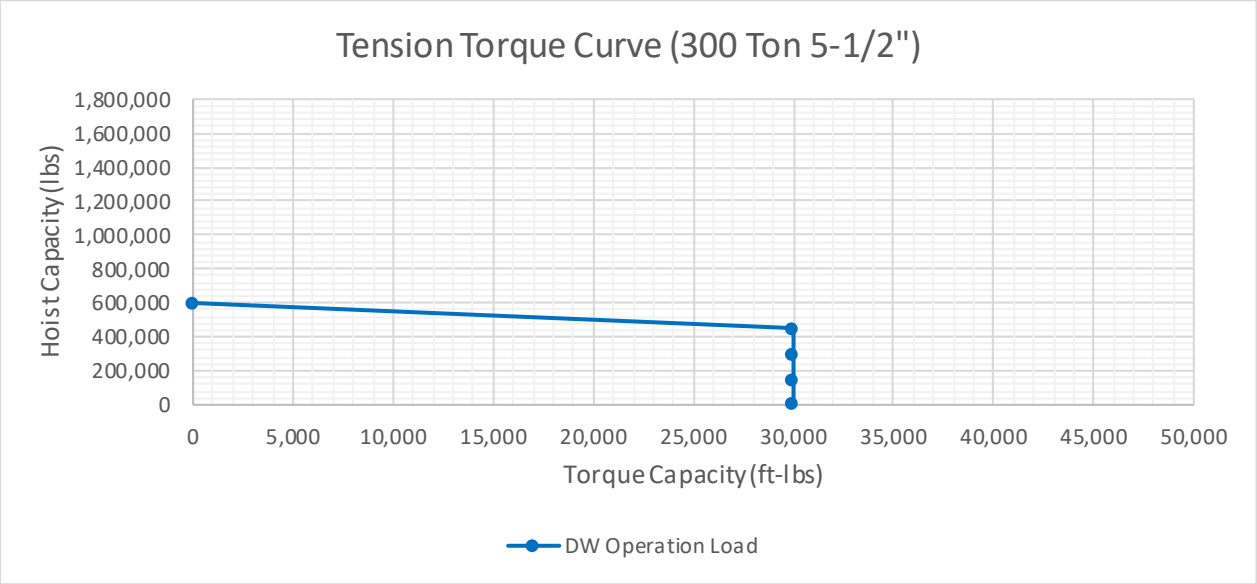
Tension Torque Curve (300 Ton 5-1/2")
Hoist Capacity (lbs)
1,800,000
1,600,000
1,400,000
1,200,000
1,000,000
800,000
600,000
400,000
200,000
0
0
5,000
10,000
15,000
20,000
25,000
30,000
35,000
40,000
45,000
50,000
Torque Capacity (ft-lbs)
DW Operation Load

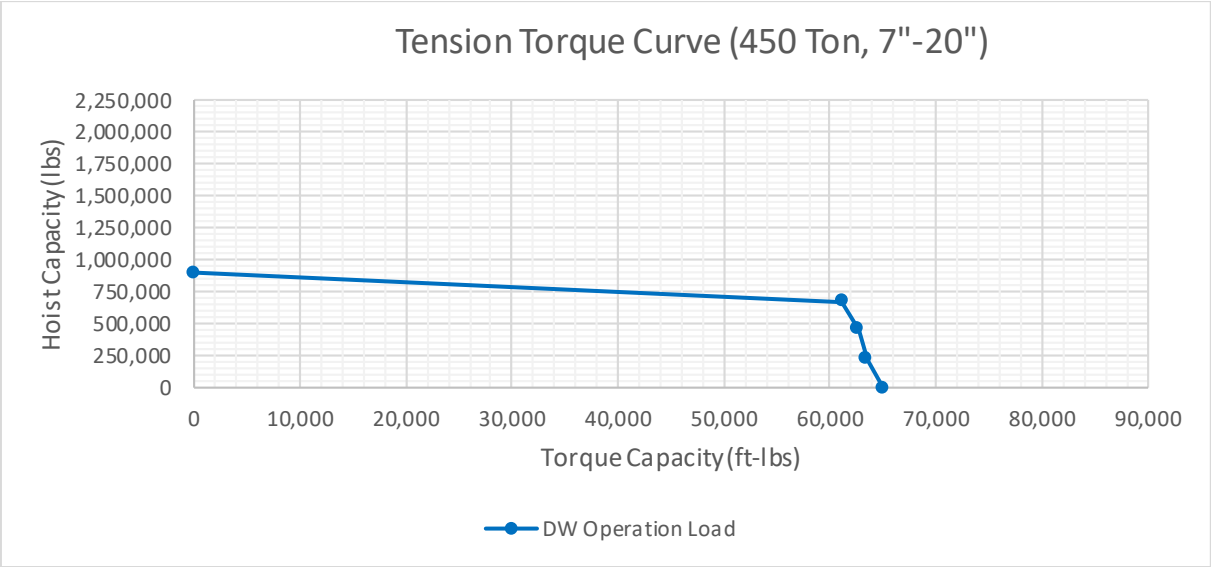
Tension Torque Curve (450 Ton, 7"-20")
Hoist Capacity (lbs)
2,250,000
2,000,000
1,750,000
1,500,000
1,250,000
1,000,000
750,000
500,000
250,000
0
0
10,000
20,000
30,000
40,000
50,000
60,000
70,000
80,000
90,000
Torque Capacity (ft-lbs)
DW Operation Load

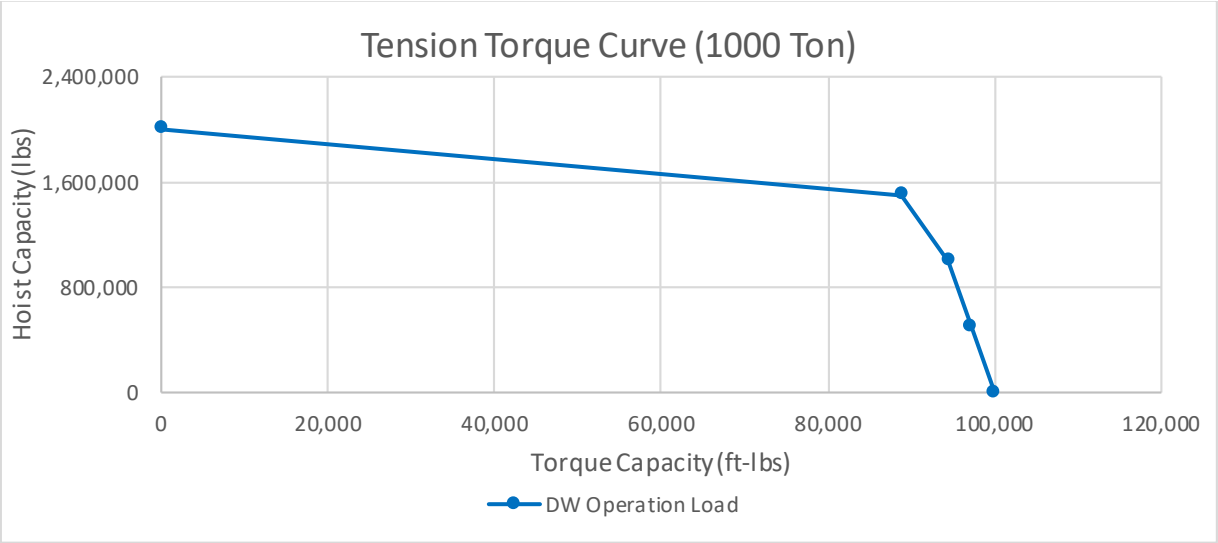
Tension Torque Curve (1000 Ton)
Hoist Capacity (lbs)
2,400,000
1,600,000
800,000
0
0
20,000
40,000
60,000
80,000
100,000
120,000
Torque Capacity (ft-lbs)
DW Operation Load

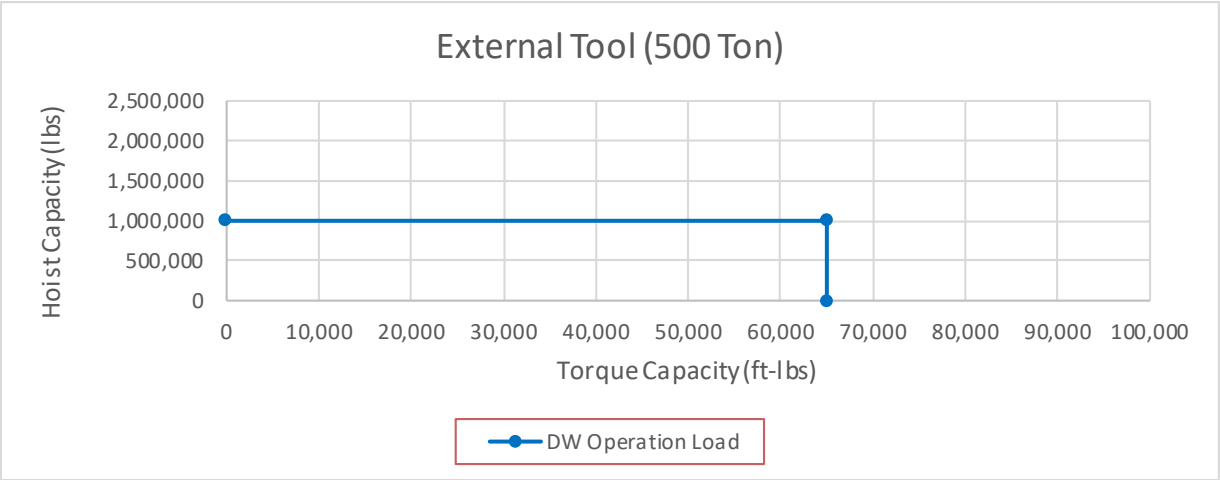
External Tool (500 Ton)
Hoist Capacity (lbs)
2,500,000
2,000,000
1,500,000
1,000,000
500,000
0
0
10,000
20,000
30,000
40,000
50,000
60,000
70,000
80,000
90,000
100,000
Torque Capacity (ft-lbs)
DW Operation Load

Section 7 - Operational Procedures

7.1 DWCRT Operational Positions

7.1.1 Locked Position

(Note the white showing below the Horizontal Indicator)
Once the slips are set at the appropriate minimum setting torque, the tool can rotate the string while in the locked position.
While in the locked position, the slips will not extend or retract.

7.1.2 Unlocked Position

(There is no white visible below the Horizontal Indicator and the Indicator is in the yellow area to extend or retract Slips)

Clockwise rotation of the tool in the unlocked position extends the slips toward the pipe while counterclockwise rotation retracts the slips.

NOTE: Count number of rotations required to completely extend the Slips during Casing make up. The exact same number of rotations is required to retract the Slips completely. The number of rotations change with internal diameter of the Casing.
During pre-job function test in Unlocked position, rotate Top Mandrel by hand clockwise to extend the Slips. Note required torque to activate the tool. Verify torque does not change at Rig site.

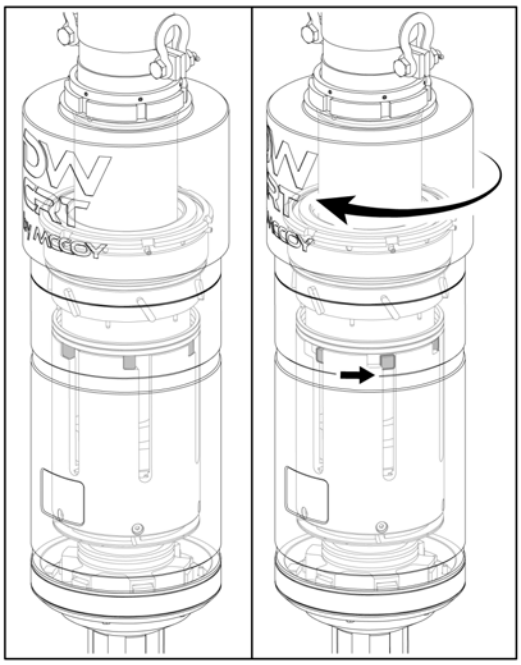

7.1.3 Push Position

In the Locked position, 12 degrees clockwise rotation of the tool rotates the Top Mandrel. Any further rotation applies torque to the casing. At this position:

1. The tool is ready to reach maximum torque capacity.
2. Top Drive weight can be applied to the tool while rotating clockwise without the tool going into the unlocked position.

WARNING!

Do not exceed 10 RPM when activating (setting or unsetting) the tool. Impact of setting or release at high RPM are a safety hazard and may cause internal damage to the Timing Lug on the Dovetail Mandrel Nut.

7.2 Rig Up Procedure

Use the following procedure to install the DWCRT on the rig's top drive. Note that the safety clamp is used as a secondary retention method and is not to be used as a primary lifting method.

1. Lower the first joint of Casing into the rotary on the rig.
2. Set the Floor Slips to hold the Casing.
3. Insert a Packer Saver (a device inserted into the box of a section of casing to guide the packer cup past any sharp edges or ledges, intended to extend the life of a packer cup (similar to a "safety nubbin")) into the coupling. The use of a Packer Saver is not required but will extend the life of the Packer Cup.
4. Thread a Lifting Cap into the CRT. Verify the lifting cap is approved for the intended weight and angle of the lift.
5. Hoist the DWCRT via the Lifting Cap. Tag line may be used to guide the tool in the joint of Casing.
6. Insert the DWCRT into the first joint of Casing. Lower the DWCRT until the tool lands on the Casing.
7. Remove the DWCRT Lifting Cap.

WARNING!

The DWCRT must be inserted into Casing before proceeding to step 8. If the DWCRT is not in a joint of Casing, there is a chance for potential damage to the Slips and Mandrel if the tool is activated.

WARNING!

The tool cannot tolerate large TopDrive to wellbore misalignment. Excessive misalignment may cause difficulty inserting the CRT. Misalignment must be less than ½ the diameter of the casing being run or 6", whichever is less.

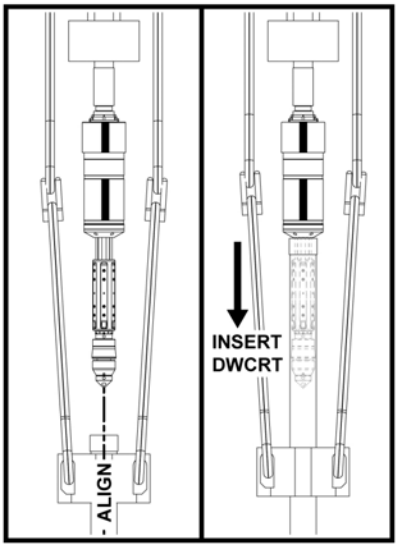

8. Using the Tool Joint Handler (Top Drive back-up or Tongs), make-up the DWCRT to the Top Drive. Mark the tool joint connection with chalk or paint to represent where the tool joint backed off. This mark should be monitored periodically, as misalignment indicates that the tool joint is backing off.

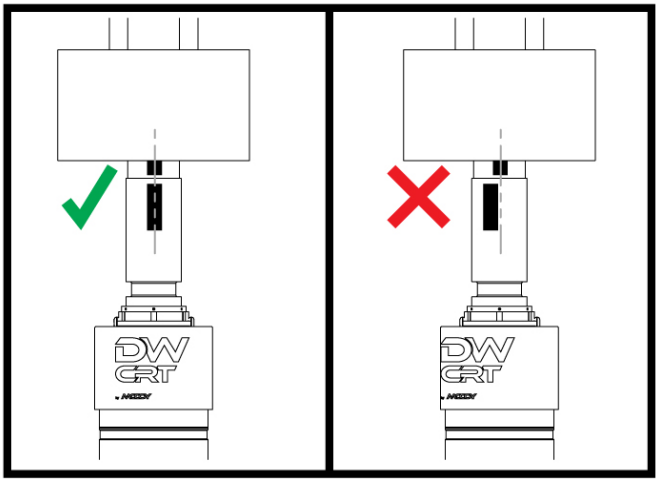

7.3 Stump Test Procedure

Use this procedure to ensure the CRT is properly installed and that tool is suitable for the casing to be run.

1. During Rig Up Procedure, the tool may have been partially activated. Rotate the Top Drive counterclockwise. The Indicator should rotate as the Housing is held stationary. This indicates the Slips are being retracted. When the housing starts spinning on the Casing and the lines are lined up, this indicates the Slips are fully retracted.
2. Rotate the tool clockwise and make-up to set torque of 3500 ft-lb. The Indicator should rotate while the Housing stays stationary, this indicates that the Slips are being extended. Count number of rotations to set tool and document the Procedure for later use.
3. Rotate the Top Drive counterclockwise. The same number of rotations are required to retract Slips completely. Verify that the Line on the Housing lines up with the Line on the Indicator and remove tool from the casing. Also verify Slips are retracted below Mandrel or Wear Guide.

NOTE: Perform Rig Up and Stump Test procedure before starting Setting Procedure

7.4 Setting Procedure (Activating the Slips)

Use this procedure to extend the slips using top drive rotation in order to apply torque or tension to the casing via the DWCRT.

1. Insert the DWCRT into the Casing by lowering the Top Drive. Lower the tool until the Indicator is near the bottom of the unlocked (yellow) stripe.
2. Rotate the tool clockwise. The Vertical Indicator should rotate while the Housing stays stationary, this indicates that the Slips are being extended. Certain situations (rig misalignment, inadequate tool maintenance) may require minor set down weight to activate the Slips and to keep the housing from rotating on the top of the casing.
3. The DWCRT Indicator should be rotated until either the Casing make-up torque or the Dovetail Mandrel's maximum unlock torque is reached. Do not exceed the torque value corresponding to the lesser of these two values. ***Refer to Appendix 1.1: Size and Ratings for unlock torque ratings to ensure a firm grip on the Casing.***
4. After setting the Slips, raise the Top Drive. The tool is placed in the locked position once approximately 2" of white band is showing under the Indicator. The DWCRT can now hold the Casing string weight and the Slips at the rig floor may be released. The Casing can now be rotated, reciprocated and circulated.

NOTE: Tool can be placed in Push position by rotating the Indicator 12 degree clockwise relative to the Housing. The tool will lug out indicated by a torque increase. To verify- when the tool is engaged in the Push position, setting down weight will not allow the tool to go into the Unlocked position (see page 14 for visual reference).

7.5 Unsetting Procedure (Releasing the Slips)

NOTE: If the tool was in the Push position, set the floor slips, rotate the Indicator 12-degree counter-clockwise (vertical lines aligned) with neutral weight before going to the Unlocked position.

1. In the locked position, lower the Casing to the floor and set the floor Slips. Slack off the Top Drive until the Indicator partially covers the yellow band. The tool is now in the unlocked position.
2. Verify Mud Pump is turned off and pressure is bled off to Stand Pipe.
3. Count rotations of the Top Drive while rotating counter-clockwise at a maximum of 10 RPM. The Indicator should

start to rotate as the Housing is held stationary. This indicates the Slips are being retracted. When the housing starts spinning on the Casing verify:

- Number of rotations are completed as per Stump Test.
- Lines are lined up; this indicates the Slips are fully retracted.

If the Indicator lines are not lined up, apply set down weight and continue to retract the Slips by rotating counterclockwise.

4. Once the Lines are lined up, raise the tool out of the Casing.

NOTE: Inspect the Slip's teeth and Packer Cup for wear after every ten joints. The teeth should be sharp and have no visible flat spots. Also, make sure the teeth are fully retracted when removing the tool from the Casing to ensure that the teeth will not contact the Casing upon the next insertion.

7.6 Connection Make-up with Conventional Tongs

1. Using appropriate Casing elevator, hoist next joint of the Casing. Insert the hoisted joint into the Casing string and make-up to the specified torque with Tongs.
2. Follow DWCRT Setting procedure, lower the string, then perform Unsetting procedure.

7.7 Running the DWCRT to Reciprocate, Rotate and Make-Up Casing

1. Install Steel Packer Saver in the coupling of the next joint and then hoist with an elevator. Insert the hoisted joint into the string.
2. Follow DWCRT Setting procedure, lower the string, then perform Unsetting procedure..

7.8 Using the DWCRT to Back Out a Joint of Casing

1. Insert the DWCRT by lowering the Top Drive. Slack off until the tool lands on the casing and continue to lower until the indicator is in the unlocked position.
2. Rotate the tool clockwise and set with the recommended torque. ***Refer to Appendix 1.4: Minimum Set Torque.***
3. Raise the tool in the locked position.
4. Rotate the tool counterclockwise to apply torque to break out the connection.

NOTE: If high break out torque is required refer to the troubleshooting section of the manual.

5. Back out the connection.
6. Lower the tool until the indicator is in the unlocked position.
7. Rotate counterclockwise to release the tool.

NOTE: If the casing begins to rotate a backup tong maybe required.

8. Once the slips are fully retracted, lift the CRT out of the casing and lay down the joint of Casing.

7.9 Running the DWCRT to Drill with Casing

1. Push position is required for drilling with Casing. Begin pumping mud through the tool once drilling operations resume. The internal valve (if optionally used) may need to be removed if a higher flow rate is required.
2. Begin rotating the DWCRT at the desired RPM.
3. Maintain positive clockwise rotation.

4. Monitor the gap between the Casing and the bump plate. If this gap is more than ¼ inch, the DWCRT may need to be released and reset to better grip the Casing.
5. Set the floor Slip once the Casing has been drilled to the floor.
6. Follow Unsetting procedure.

7.10 **Fill-Up Procedures with DWCRT**

Use this procedure to use the DWCRT to fill the casing up with mud, but not to apply any pressure or circulation. Volume of mud will need to be monitored so that it does not over fill.

1. Lower the Casing and set the floor Slips. Be mindful of the bails and how low the Top Drive can get to the floor.
2. Insert the Nose into the Casing. Use link tilts to center the Casing if the Casing is off- center.
3. Turn the pumps on and fill to the desired amount.
4. Turn the pumps off. Open the drain on the standpipe and bleed pressure to zero.
5. Allow the mud to drain out of the tool.

7.11 Circulating Procedures with DWCRT

Procedure for taking returns from the casing, pumping pressurized mud or cement.

1. Follow Setting procedure.
2. Turn the pumps on. Fill and circulate to the desired amount.
3. When complete, turn the pumps off. Open the drain on the standpipe and bleed pressure to zero.
4. Follow Unsetting procedure.

NOTE:

- **Slowly raise the Top Drive to remove the tool. An air pressure may have formed under the Packer Cup which can be released once the Packer Cup slides out of the internal diameter. Use caution when hoisting the tool out of the Casing. Ensure the tool does not snag on the Casing.**
- **Allow the mud to drain out after the Packer Cup exits the Casing before continuing to hoist the tool.**
- **Occasionally the Indicator will continue to completely cover the yellow stripe on the Housing as the tool is raised out of the Casing. This is indicative of an air pressure trapped below the Packer Cup which will lift the Housing and Mandrel until the Packer Cup releases its seal. Usually, the seal is released in the coupler. Verify Stand Pipe is open to bleed of pressure.**

7.12 Rig Down

Procedure to remove the CRT from the Top Drive.

1. With the tool in a joint of Casing, use the Tool Joint Handler (Top Drive back-up or Tongs) to break-out the DWCRT from the Top Drive.
2. Thread a Lifting Cap into the CRT.
3. Hoist the DWCRT via the Lifting Cap from the Casing joint.
4. Place the tool in the assembly stand. Remove Lifting Cap.

7.13 Operating Specifications

7.13.1 DWCRT Load Rating

Often the McCoy DWCRT is stronger than the Casing it is gripping on. To keep from damaging the Casing, we recommend not exceeding 80% of the pipe body tensile yield strength for the Casing used. The manufacturer should provide a tensile rating for the Casing or it can be looked up in a reference such as the manufacturer's spec sheet or API 5CT.

Example 1: When running 5-1/2" 17# J-55 Casing, the rated tensile load is 273,000 lb. This number should be multiplied by 0.80 to get the recommended max tensile load.

0.8 x 273,000 = 218,400.

Even though the 5-1/2" internal Dovetail Mandrel is rated for 225 Tons, the limit for this Casing is 218,400 lb. or 109.2 tons.

Example 2: When running 5-1/2" 23# P110 Casing, the rated tensile load is 729,000 lb. This number should be multiplied by 0.8 to get its recommended tension load.

0.8 x 729,000 = 583,200.

Even though the maximum load for the Casing is 583,200 lb (or approximately 290 tons), the 5-1/2" internal Dovetail Mandrel is only rated at 225 tons. As such, 225 Tons is the maximum axial load that should be applied.

7.13.2 DWCRT Torque Rating

Often the McCoy' DWCRT is stronger than the Casing it is gripping. To keep from damaging the Casing, we recommend a Safe Setting Torque based on the Casing used. The manufacturer should have a tensile rating for the Casing, or it can be looked up in a reference such as Baker Hughes Tech Facts Engineering Handbook or API 5CT.

Example 1: When running 7" 17# H-40 Casing, the rated tensile load is 196,000 lb. This number should be multiplied by 0.8 to get the recommended maximum tension load.

0.8 x 196,000 = 156,800 lb.

The recommended tension load should then be multiplied by 0.054 to get maximum setting torque.

156,800 x 0.054 = 8,500 ft-lb

Even though the internal Dovetail Mandrel is rated for 50,000 ft-lb in the unlocked position, the limit for this size Casing is 8,500 ft-lb. 8,500 ft-lb is the maximum torque that should be applied.

Example 2: When running 7" 35# Q-125 Casing, the rated tensile load is 1,370,000 lb. This number should be multiplied by 0.8 to get its recommended tension load.

0.8 x 1,370,000 = 1,096,000

The recommended tension load should then be multiplied by 0.054 to get maximum setting torque.

1,096,000 x 0.054 = 59,000 ft-lb

While the maximum setting torque for this Casing is 59,000 ft-lb, the 7" internal Dovetail Mandrel is only rated at 50,000 ft-lb in the unlocked position. 50,000 should be the maximum torque applied in the unlocked position.

Refer to Appendix 1.1: Size and Ratings for Locked and Unlocked Torque Limits.

Section 8 - Packer Cups and Gage Rings

8.1 Packer Cups

Packer Cups are an interference seal used to seal off the mud system of the DWCRT, enabling flowback, circulation, or pumping cement thru the DWCRT. Use this rule for determining the best Packer Cup size for a given Casing size and weight.

a. The OD sealing area on the cup should be .100”-.250” over the Casing ID for 4-1/2” to 6-5/8” Casing sizes.
b. The OD sealing area on the cup should be .250”-.350” over the Casing ID for 7” to 20” Casing sizes.

Before storage, it is good practice to measure and label the OD of the Packer Cups after returning from a job. Packer Cups are made of rubber which will wear after several jobs.

8.2 Gage Rings

Gage Rings are used to both center the Packer Cups and prevent wear and tear on the Packer Cups, thereby extending their use life. Drifts for Gage Rings are normally smaller than the ID of the Casing by:

0.125" for 4-1/2" to 8-5/8"
0.156" for 9-5/8"-14"
0.188" for 16"-20"

Hint for internal flush Casing: A thread protector can be bored out and screwed into the internal flush Casing of all the joints where the Packer Cup will be inserted. The modified thread protector covers the sharp corners on the Casing thread that damages the Packer Cups and acts similar to “lift nubbin”.

Section 9 - DWCRT Lubrication and Maintenance

Only McCoy manufactured parts are to be used on the DWCRT. Welding should never be performed on any primary load carrying components of the DWCRT. The DWCRT utilizes modern heat treated alloys and special processes which can be dangerously altered by heating or welding. Repairs of any DWCRT part should only be undertaken by McCoy or a McCoy authorized shop with the proper knowledge and procedures to ensure the safety and performance of the tool are not compromised. McCoy recommends maintenance and inspection in accordance with API RP8B guidelines.

Customers should work with McCoy to jointly develop and update inspection, maintenance, and repair procedures consistent with equipment application, loading, work environment, and storage conditions. These factors may change from time-to-time as a result of equipment history, product improvements, new maintenance techniques, and service conditions. NDE should be performed per ASTM E165 and ASTM E709. McCoy recommends a performance pull test every 5 years followed by NDE. Inspection of gauging rotary connection should be performed to API 7-2.

Schedule frequency listed below is based on 1 to 4 jobs per month under normal operating conditions.

Category I

During the job

Observation of equipment during operation for indications of inadequate performance.

a. Check for tears and rips in the Packer Cup.
b. Verify after every joint that the Indicator line is lined up before removing from Casing.
c. Check that Slips are recessed below Dovetail Mandrel or Wear Guide before inserting Casing.
d. Make sure the teeth are sharp and free of debris.
e. Check paint or chalk line on Top Drive-DWCRT connection to verify the connection is properly torqued.

Category II

After every job

Category I inspection plus further inspection for corrosion or missing components, deterioration, proper lubrication, visible external cracks, and adjustment.

a. Wash OD and ID of the tool.
b. Visually Inspect tool joint threads.
c. If used, remove the internal valve, clean and redress.
d. Replace internal wiper seal in Dovetail Mandrel.
e. Lubricate Dovetail Mandrel threads.
f. Clean, lubricate, and check for wear on the Clutch and mating teeth and slots.
g. Re-tape the vertical line.
h. Remove and disassemble Circulating Assembly, replace seals and reassemble.
i. Remove Bump Plate, Slips and Inserts, and inspect Dovetail grooves on the Slips and Dovetail Mandrel for wear, lubrication, chips or cracks.
j. Wash Slips and Dovetail Mandrel before re-applying grease.
k. Inspect components in the mud flow path for erosion.
l. Inspect and repair as required, the White and Yellow indicator stripes on Housing.

Category III

Every 6 months.

Category II inspection plus further inspection which should include NDE of exposed critical areas and may involve some disassembly to access specific components and identify wear that exceeds allowable tolerances.

a. Replace all seals in the Housing.
b. Carry out NDE on critical load-bearing components which include:
    1- Dovetail Mandrel
    2- Slips (when applicable)
    3- Inserts

(Contact McCoy for more details)

Category IV

Every 12 months.

Category III inspection plus further inspection which should include NDE of all primary load carrying components and critical dimension measurement.

Carry out NDE on all primary load carrying components which include:

a. Dovetail Mandrel
b. Slips
c. Inserts
d. Housing
e. Housing Cap
f. Dovetail Mandrel Nut
g. Top Mandrel

9.1 DWCRT Spring Replacement Guide

Replace the family of springs when damaged or when the uncompressed length of any individual spring is less than:

Part# 701254 Bump Plate Springs (Qty-6): 2.5".
Part# 701250 Mandrel Nut Springs (Qty-10): 5.51".
Part# 605721 Bevel Spring (Qty-4): 1.614".

9.2 Results of Inspections

Parts with indications less than 3/16" located in non-critical areas are permitted. A follow-up examination is recommended to check for indication growth. External tool dogs have a max wear limit of 3/16" to provide proper friction on the Casing.

NOTE: McCoy requires replacement of dies whose teeth have been worn flat or broken. To measure the flatness of DWCRT Dies, use optical micrometer to measure the width of the flat on the tip of the tooth. If the flat is more than 0.025" wide, the tooth is considered damaged. If more than 10% of the teeth within any 2" x 2" square are damaged, the Die should be replaced .

9.3 Recommended Lubrication

McCoy recommends using the following lubrication. The use of other lubricants may affect the performance and accelerate wear on critical components, reducing the life expectancy of the parts and/or effectiveness of the tool.

Area	Lubrication
Dovetail Threads and Slip/Die Taper Surfaces above 32°F (0°C)	Klüberplex AG 11-462 (McCoy P/N: 700053)
Dovetail Threads and Slip/Die Taper Surfaces below 32°F (0°C)	Klüberplex ELM 44-80 ARTIC (McCoy P/N: 700095)
Bolt and Set Screw Threads	Loctite 76764 (McCoy P/N: 700093)
Square Threads, Seals, Splines and other	NLGI No. 2 Lithium equivalent

Keep all parts lubricated to prevent corrosion.

9.3.1 Stocking Quantity

McCoy suggests enough spare parts of seal kits, Packer Cups, Slips, Inserts and springs be stocked to properly operate and maintain the tool for 3 months using DWCRT Lubrication and Maintenance schedule. McCoy also recommends additional set of Slips be purchased. For additional details, please contact customer service as detailed on page 7 of this manual.

Common wear items for the circulator assembly such as packer cups and gage rings are listed on the table in Appendix 1.7. Select the appropriate part number for your DWCRT size and configuration. A complete tool requires a Head Assembly, Gripping Assembly, and Circulator Assembly.

Use the table below for generalized spare part recommendations.

Part Number	Description	QTY Per 3 Month	Qty per Year
606476	Head Assembly Redress Kit	3	10
606475	Head Assembly Rebuild Kit	-	2
606201	Internal Gripping Assembly Redress Kit 4-1/2”- 6-5/8”	3	10
606202	Internal Gripping Assembly Redress Kit 7”- 8-5/8”	3	10
606203	Internal Gripping Assembly Redress Kit 9-5/8”- 20”	3	10
606205	Internal Gripping Assembly Overhaul Kit 4-1/2”- 6-5/8”	-	1
606206	Internal Gripping Assembly Overhaul Kit 7”- 8-5/8”	-	1
606207	Internal Gripping Assembly Overhaul Kit 9-5/8”- 20”	-	1
606213	External Gripping Assembly Redress Kit 4-1/2” -7-5/8”	3	10
606212	External Gripping Assembly Rebuild Kit 4-1/2” – 7-5/8”	-	1
605105	Internal Circulator Assembly Redress Kit 4-1/2” – 6-5/8”	3	12
605149	Internal Circulator Assembly Redress Kit 7”-7-5/8”	3	12
605098	Internal Circulator Assembly Redress Kit 8-5/8” – 20”	3	12
606522	External Circulator Assembly Rebuild Kit 4-1/2” – 7-5/8”	3	12
Ref Table	Packer cup	2	10
Ref Table	Gage Ring	-	2
605736	Clutch	-	1
605620	Snorkel	-	1

9.4 DWCRT Inspection Chart

9.4.1 Head Assembly

- ☐ 1. Inspect tool joint for thread and seal area damage.
- ☐ 2. Inspect internal threads and the threaded nut that holds the Snorkel.
- ☐ 3. Inspect Housing Cap male and female threads and seal areas.
- ☐ 4. Inspect internal Clutch teeth for deformation (black coating worn away is acceptable).
- ☐ 5. Inspect external lugs on the Clutch. Make sure the Clutch moves and rotates freely in the Housing.
- ☐ 6. Inspect wiper seal surface for corrosion and cracks.
- ☐ 7. Inspect external splines on Top Mandrel for deformation (black coating worn away is acceptable).
- ☐ 8. Inspect Snorkel wiper seal area for corrosion and cracks.
- ☐ 9. Inspect internal threads on Dovetail Mandrel Nut for scaring or galling.
- ☐ 10. Inspect Thrust Washers for scaring or galling.
- ☐ 11. Inspect seal area on Snorkel for rust or pits.
- ☐ 12. Inspect critical cross-section of Top Mandrel for cracks.

Checked By: _____

Date: _____

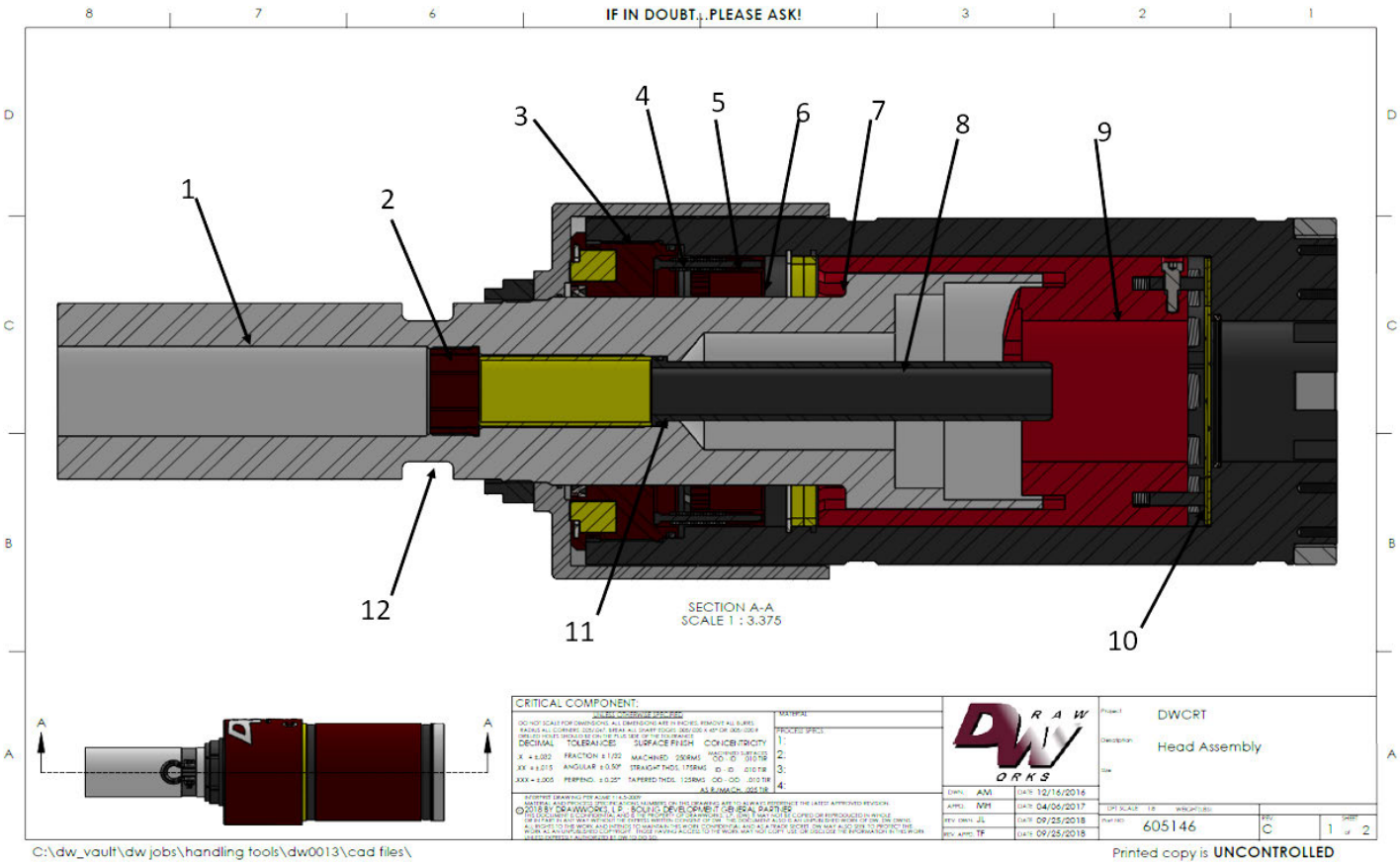

9.4.2 Internal Assembly

- ☐ 1. Inspect seal groove for corrosion.
- ☐ 2. Inspect thread for wear.
- ☐ 3. Inspect seal area for corrosion or pitting.
- ☐ 4. Check for broken springs or short springs.
- ☐ 5. Inspect Insert teeth per acceptance criteria.
- ☐ 6. Inspect Slip contact areas for wear or corrosion.
- ☐ 7. Inspect Wear Guide OD, verify Slips are recessed when tool is released.
- ☐ 8. Inspect internal seal diameter.
- ☐ 9. Inspect Packer Cup OD for tears, cracks, or excessive wear.
- ☐ 10. Inspect Gage Ring OD based on Casing being run.

Checked By: _____

Date: _____

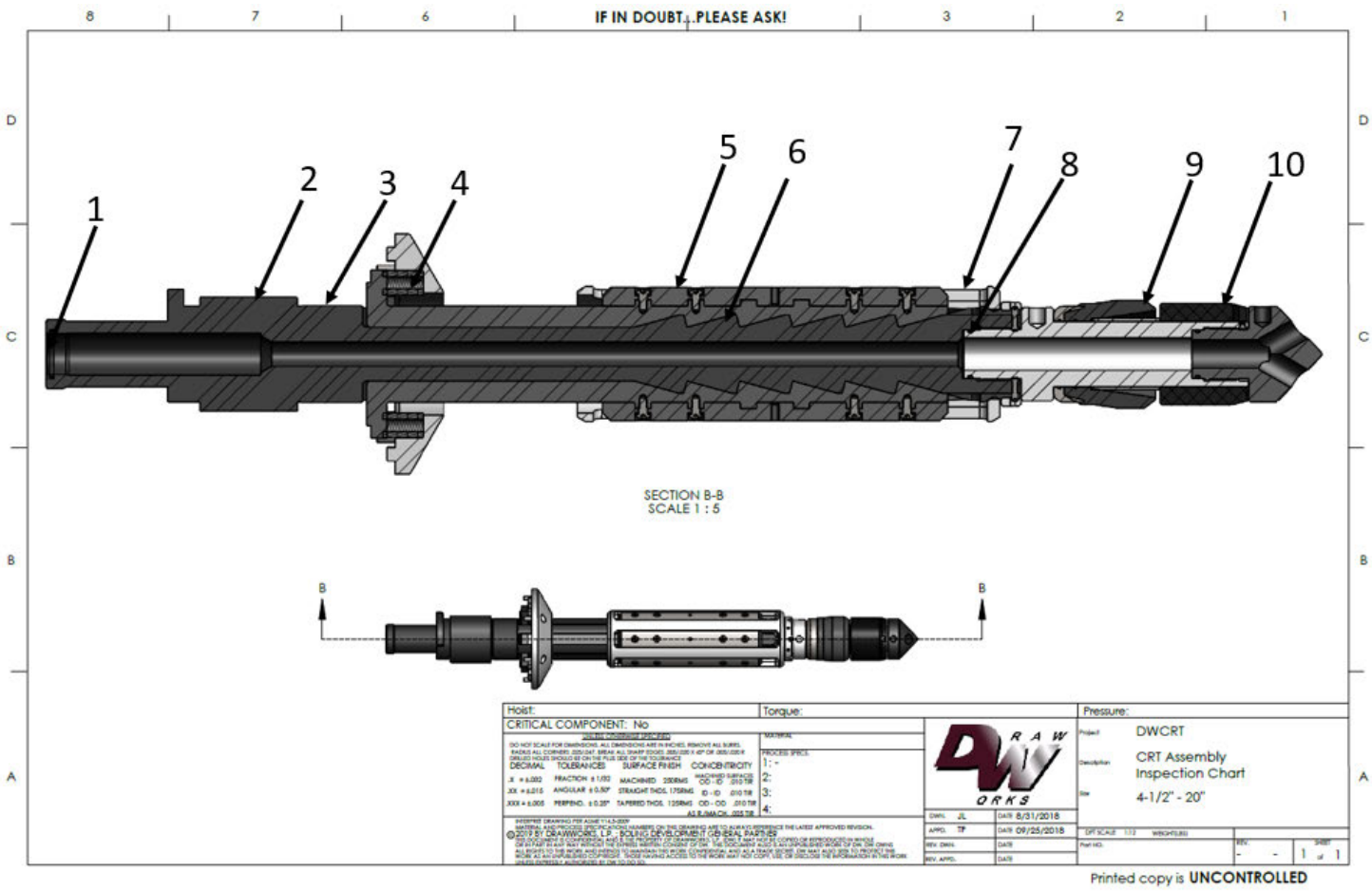

9.4.3 External Assembly

- ☐ 1. Inspect seal groove for corrosion.
- ☐ 2. Inspect thread for wear.
- ☐ 3. Inspect seal area for corrosion or pitting.
- ☐ 4. Check for broken springs or short springs.
- ☐ 5. Inspect Insert teeth per acceptance criteria.
- ☐ 6. Inspect Slip contact areas for wear or corrosion.
- ☐ 7. Inspect Wear Guide OD, verify Slips / Ramps are recessed when tool is released.
- ☐ 8. Inspect seal internal diameter.
- ☐ 9. Inspect Packer Cup OD for tears, cracks, or excessive wear.
- ☐ 10. Inspect Gage Ring OD for proper size based on Casing being run.

Checked By: _____

Date: _____

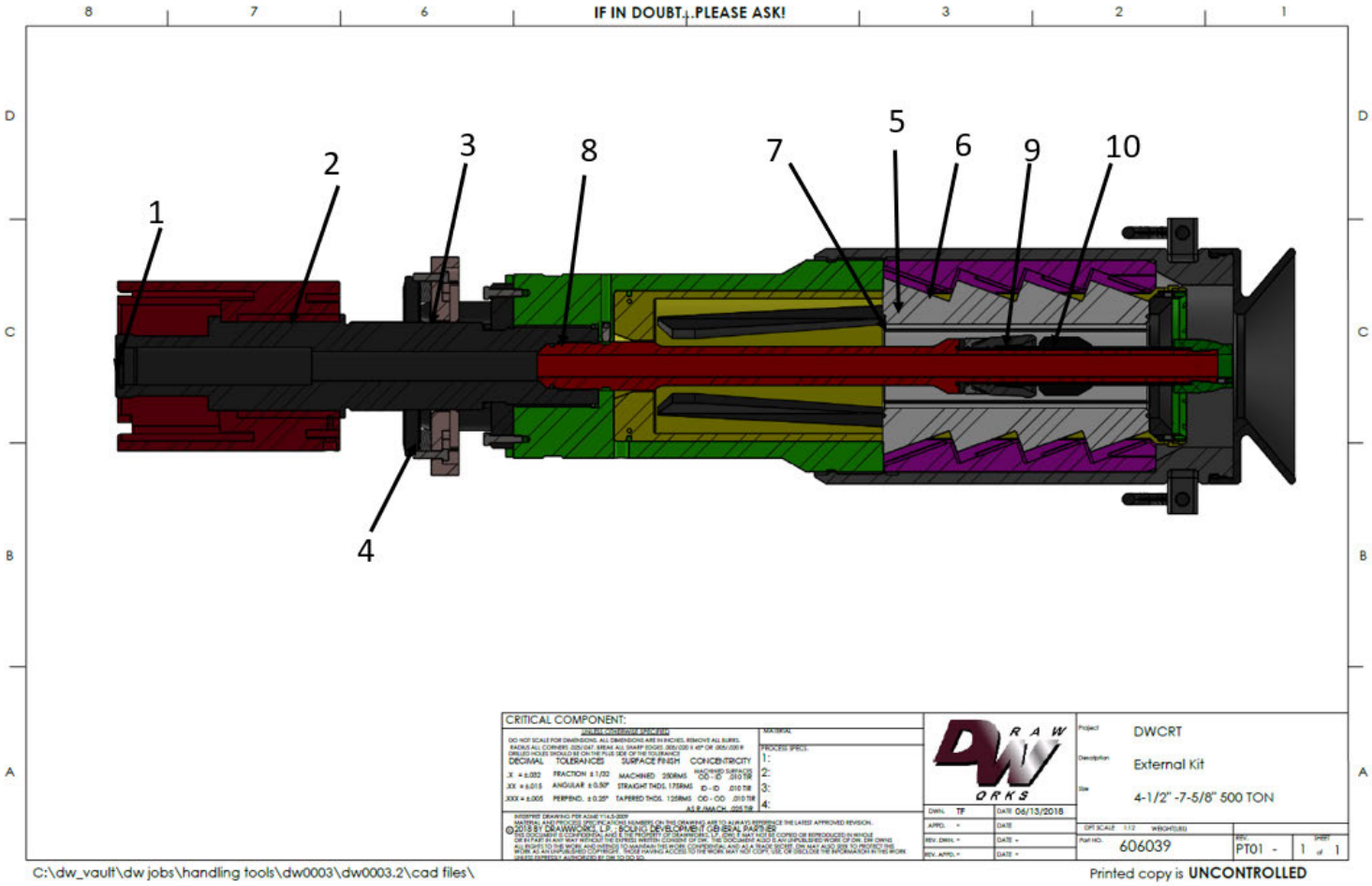

9.4.4 Slip Teeth Inspection Criteria

WARNING

The DWCRT cannot tolerate wellbore misalignment in excess of 1” less than half of the pipe diameter. For example, a 20” casing can tolerate 9” of wellbore misalignment (20”/2 - 1” = 9”).
Once top drive weight has been set down on the DWCRT, the tool must be retorqued before a tensile load can be applied.

The DWCRT compensator will unlock the tool if the top drive continues to lower after the casing gets stuck. Any rotation of the tool while in the unlocked position, even clockwise rotation, has the potential to retract the Slips and release the casing string.

Up to 100,000 lbs. of set-down weight may be applied to the tool in the unlocked position as long as the tool isn’t rotated. Do not use the DWCRT compensator as a jar for hammering the casing into the well.

Occasionally the Indicator will continue to completely cover the yellow stripe on the Housing as the tool is raised out of the casing. This is indicative of an air bubble trapped below the Packer Cup which will lift the Housing and Mandrel until the Packer Cup releases its seal. Usually, the seal is released in the coupler.

Slips that are not fully retracted can drag along the casing ID and threads which may result in damage to the casing or damage to the tool. The Housing will spin with the Top Mandrel and Indicator once the Slips are fully retracted. Verify that the Retract Line on the Housing lines up with the Retract Line on the Indicator. If the two are not lined up, apply set down weight and continue to retract the Slips.

Dies whose teeth that have been worn flat or broken must be replaced. To measure the flatness of DWCRT dies, use a caliper to measure the width of the flat on the tip of the tooth. If the flat is more than 0.025” wide, the tooth is considered damaged.

Count both the total number of teeth and the number of damaged teeth in a 2” x 2” square. If the number of damaged teeth is more than 10% of the total number of teeth in that square, the die should be replaced.

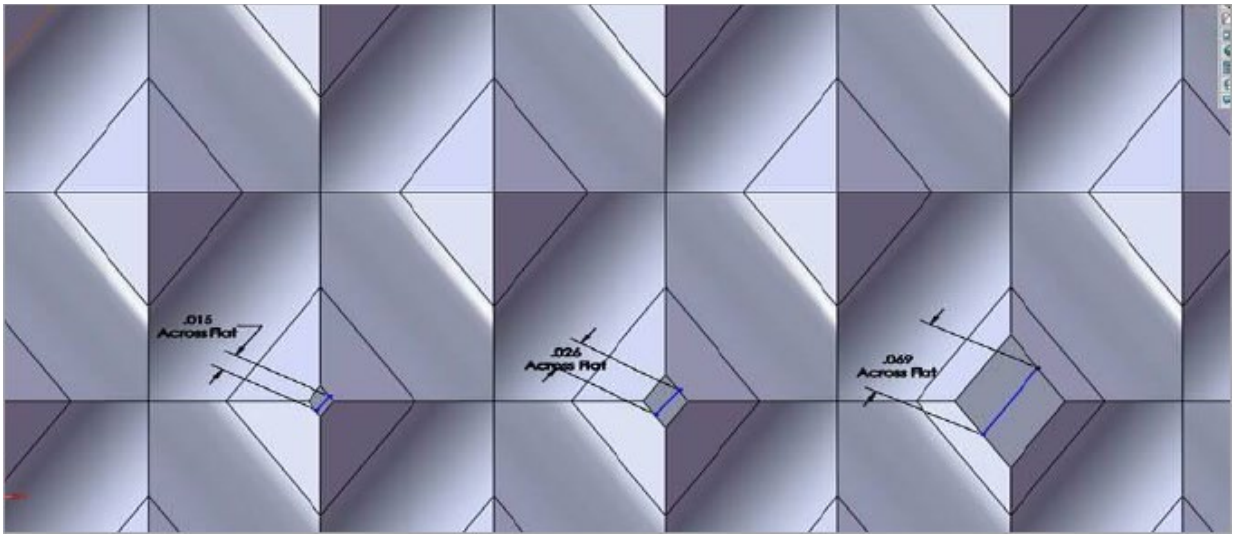

Section 10 - Assembly – BOMs

10.1 DWCRT Assembly

IF IN DOUBT...PLEASE ASK!

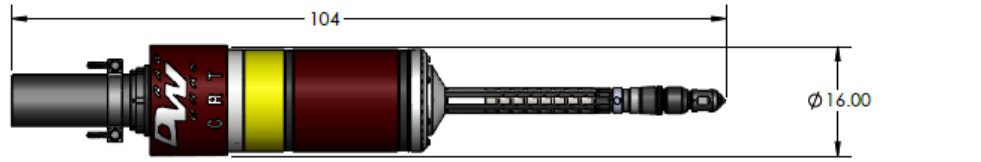

140 Ton 4-1/2" 9.5-15.10# Display

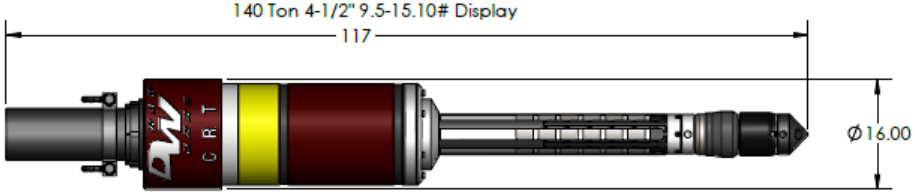

450 Ton 7" 17-35# Display

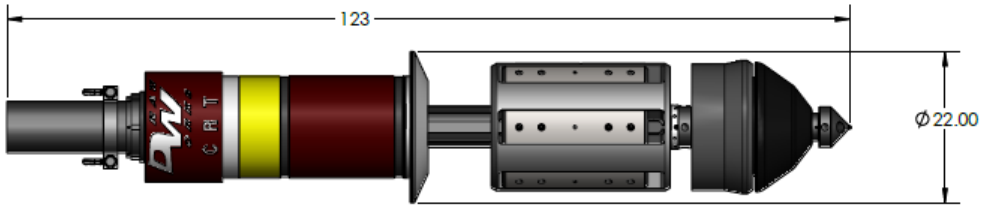

450 Ton 20" 94-133# Display

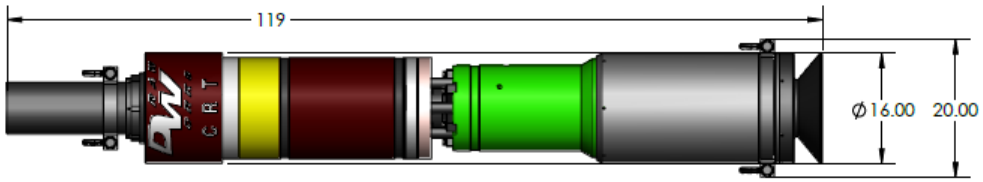

500 Ton 4-1/2" Display

Casing Range	Tension (Tons)	Torque (ft-lb.)	OAL w/circulator (ft)
4-1/2" 9.5-15.10#	140	13,000	8.6
5" 18-23.2#	160	15,000	8.6
5-1/2" 15.5-26.8#	225	25,000	8.9
5-1/2" 15.5-23#	255	25,000	8.9
5-1/2" 20-23#	300	30,000	8.9
6" 20-24.5#	430	30,000	9
6-5/8" 20-36.7#	370	50,000	9.6
7" 17-35# 7-5/8" 24-42.8#	450	65,000	9.6
8-5/8" 24-44# 9-5/8" 36-59.4# 10-3/4" 40.5- 60.7# 11-3/4" 47-71# 13-3/8" 54.4-85#	450	65,000	9.7
16" 65-109# 16-3/4" 65-109# 18-5/8" 87.5-117# 20" 94-133#	450	65,000	10
4-1/2"-7-5/8" External	500	65,000	9.8

Hoist: | Torque: | Pressure:

CRITICAL COMPONENT:

DO NOT SCALE FOR DIMENSIONS. ALL DIMENSIONS ARE IN INCHES. REMOVE ALL BURRS. RADIUS ALL CORNERS .025/.047. BREAK ALL SHARP EDGES .005/.030 X 45° OR .005/.020 R DRILLED HOLES SHOULD BE ON THE PLUS SIDE OF THE TOLERANCE

DECIMAL TOLERANCES		SURFACE FINISH	CONCENTRICITY
.X = ±.032	FRACTION ±1/32	MACHINED 250RMS	MACHINED SURFACES OD - ID .010 TIR
.XX = ±.015	ANGULAR ±0.50°	STRAIGHT THDS. 175RMS	ID - ID .010 TIR
.XXX = ±.005	PERPEND. ±0.25°	TAPERED THDS. 125RMS	OD - OD .010 TIR
		AS R/MACH. .025 TIR	

MATERIAL

PROCESS SPECS.
1:
2:
3:
4:

INTERPRET DRAWING PER ASME Y14.5-2009
MATERIAL AND PROCESS SPECIFICATIONS NUMBERS ON THIS DRAWING ARE TO ALWAYS REFERENCE THE LATEST APPROVED REVISION.

©2018 BY DRAWWORKS, L.P. - BOLING DEVELOPMENT GENERAL PARTNER
THIS DOCUMENT IS CONFIDENTIAL AND IS THE PROPERTY OF DRAWWORKS, LP. IT MAY NOT BE COPIED OR REPRODUCED IN WHOLE OR IN PART IN ANY WAY WITHOUT THE EXPRESS WRITTEN CONSENT OF DW. THIS DOCUMENT ALSO IS AN UNPUBLISHED WORK OF DW. DW OWNS ALL RIGHTS TO THIS WORK, AND INTENDS TO MAINTAIN THIS WORK CONFIDENTIAL AND AS A TRADE SECRET. DW MAY ALSO SEEK TO PROTECT THIS WORK AS AN UNPUBLISHED COPYRIGHT. THOSE HAVING ACCESS TO THE WORK MAY NOT COPY, USE, OR DISCLOSE THE INFORMATION IN THIS WORK UNLESS EXPRESSLY AUTHORIZED BY DW TO DO SO.

DWN.	AM	DATE	1/13/2017
APPD.	MH	DATE	4/13/2017
REV. DWN.	JL	DATE	01/17/2019
REV. APPD.	RU	DATE	01/17/2019

Project: DW0013
Description: DWCRT Assembly
Size: 4-1/2"-20"
DFT SCALE 1:16 WEIGHT(LBS)
Part NO. 605025 | REV. D | SHEET 1 of 2

C:\DW_Vault\DW Jobs\Handling Tools\DW0013\CAD Files\

Printed copy is **UNCONTROLLED**

IF IN DOUBT...PLEASE ASK!

ITEM NO.	PART NUMBER	DESCRIPTION	Size	Head Assembly Options/QTY.
1	606474	Head Assembly Anti-collapse 1/4" Travel	500 Ton	1
2	606479	Head Assembly Shorty Anti-collapse 1/4" Travel	500 Ton	1

ITEM NO.	PART NUMBER	DESCRIPTION	Size	Circulator Assembly Options/QTY.
20	605101	Circulator Assembly	4-1/2" - 6-5/8"	1
21	605090	Circulator Assembly	8-5/8" 13-3/8"	1
22	605351	Circulator Assembly	16" 20"	1
23	605071	Circulator Assembly	7" 7-5/8"	1
24	606188	Circulator Assembly External	4-1/2"-7-5/8"	1

ITEM NO.	PART NUMBER	DESCRIPTION	Size	Internal and External Kit/QTY.
10	605730	Internal Gripping Assembly	4-1/2" 20"	1
11	606280	External Gripping Assembly	4-1/2-7-5/8"	1

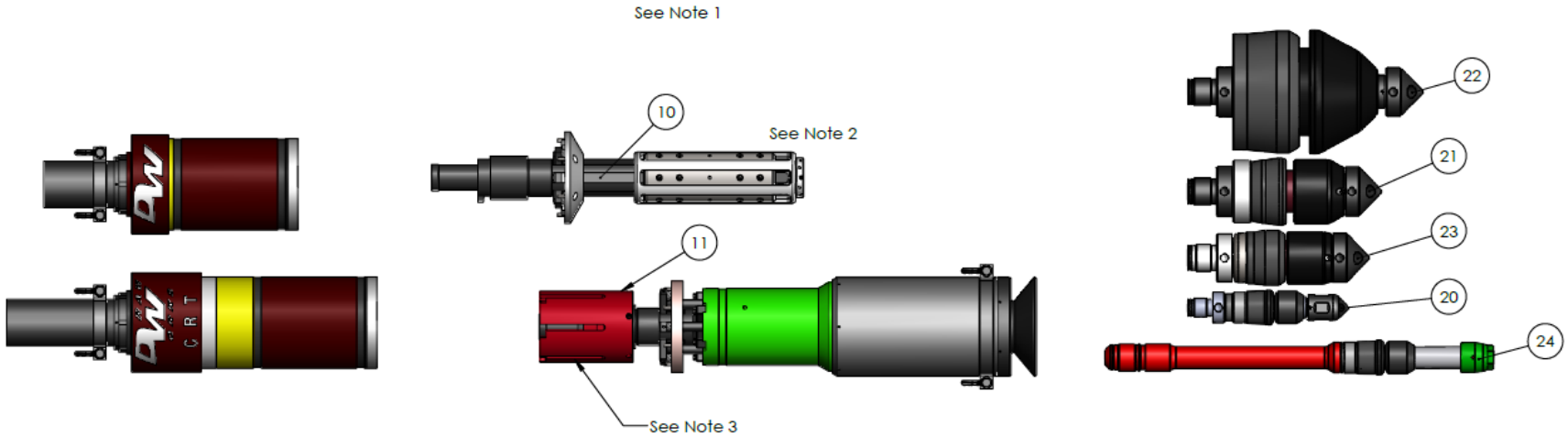

Notes:

1. Select one each for a complete tool: Head Assembly, Grip Assembly, Circulators Assembly. Not all components can be used together.
2. Refer to 605730 for other Internal gripping assembly sizes.
3. Currently External takes a different Dovetail Mandrel Nut. When External is qouted You'll need to take that into consideration.

Hoist: | Torque: | Pressure:

CRITICAL COMPONENT:

UNLESS OTHERWISE SPECIFIED

DO NOT SCALE FOR DIMENSIONS. ALL DIMENSIONS ARE IN INCHES. REMOVE ALL BURRS. RADIUS ALL CORNERS .005/.047. BREAK ALL SHARP EDGES .005/.020 X 45° OR .005/.020 R DRILLED HOLES SHOULD BE ON THE PLUS SIDE OF THE TOLERANCE

DECIMAL TOLERANCES		SURFACE FINISH	CONCENTRICITY
.X = ±.032	FRACTION ±1/32	MACHINED 250RMS	MACHINED SURFACES OD - ID .010 TIR
.XX = ±.015	ANGULAR ±0.50°	STRAIGHT THDS. 175RMS	ID - ID .010 TIR
.XXX = ±.005	PERPEND. ±0.25°	TAPERED THDS. 125RMS	OD - OD .010 TIR
			AS R./MACH. .025 TIR

MATERIAL

PROCESS SPECS.
1:
2:
3:
4:

INTERPRET DRAWING PER ASME Y14.5-2009
MATERIAL AND PROCESS SPECIFICATIONS NUMBERS ON THIS DRAWING ARE TO ALWAYS REFERENCE THE LATEST APPROVED REVISION.

©2018 BY DRAWWORKS, LP. - BOLING DEVELOPMENT GENERAL PARTNER
THIS DOCUMENT IS CONFIDENTIAL AND IS THE PROPERTY OF DRAWWORKS, LP. (DW). IT MAY NOT BE COPIED OR REPRODUCED IN WHOLE OR IN PART IN ANY WAY WITHOUT THE EXPRESS WRITTEN CONSENT OF DW. THIS DOCUMENT ALSO IS AN UNPUBLISHED WORK OF DW. DW OWNS ALL RIGHTS TO THIS WORK AND INTENDS TO MAINTAIN THIS WORK CONFIDENTIAL AND AS A TRADE SECRET. DW MAY ALSO SEEK TO PROTECT THIS WORK AS AN UNPUBLISHED COPYRIGHT. THOSE HAVING ACCESS TO THE WORK MAY NOT COPY, USE, OR DISCLOSE THE INFORMATION IN THIS WORK UNLESS EXPRESSLY AUTHORIZED BY DW TO DO SO.

DRAWORKS

DWN.	AM	DATE	1/13/2017
APPD.	MH	DATE	4/13/2017
REV. DWN.	JL	DATE	01/17/2019
REV. APPD.	RU	DATE	01/17/2019

Project: DW0013

Description: DWCRT Assembly

Size: 4-1/2"-20"
140 Ton 4-1/2"

DFT.SCALE 1:16 WEIGHT(LBS)

Part NO. 605025 | REV. D | SHEET 2 of 2

C:\DW_Vault\DW Jobs\Handling Tools\DW0013\CAD Files\

Printed copy is **UNCONTROLLED**

10.1.1 Head Assembly, 500 Ton

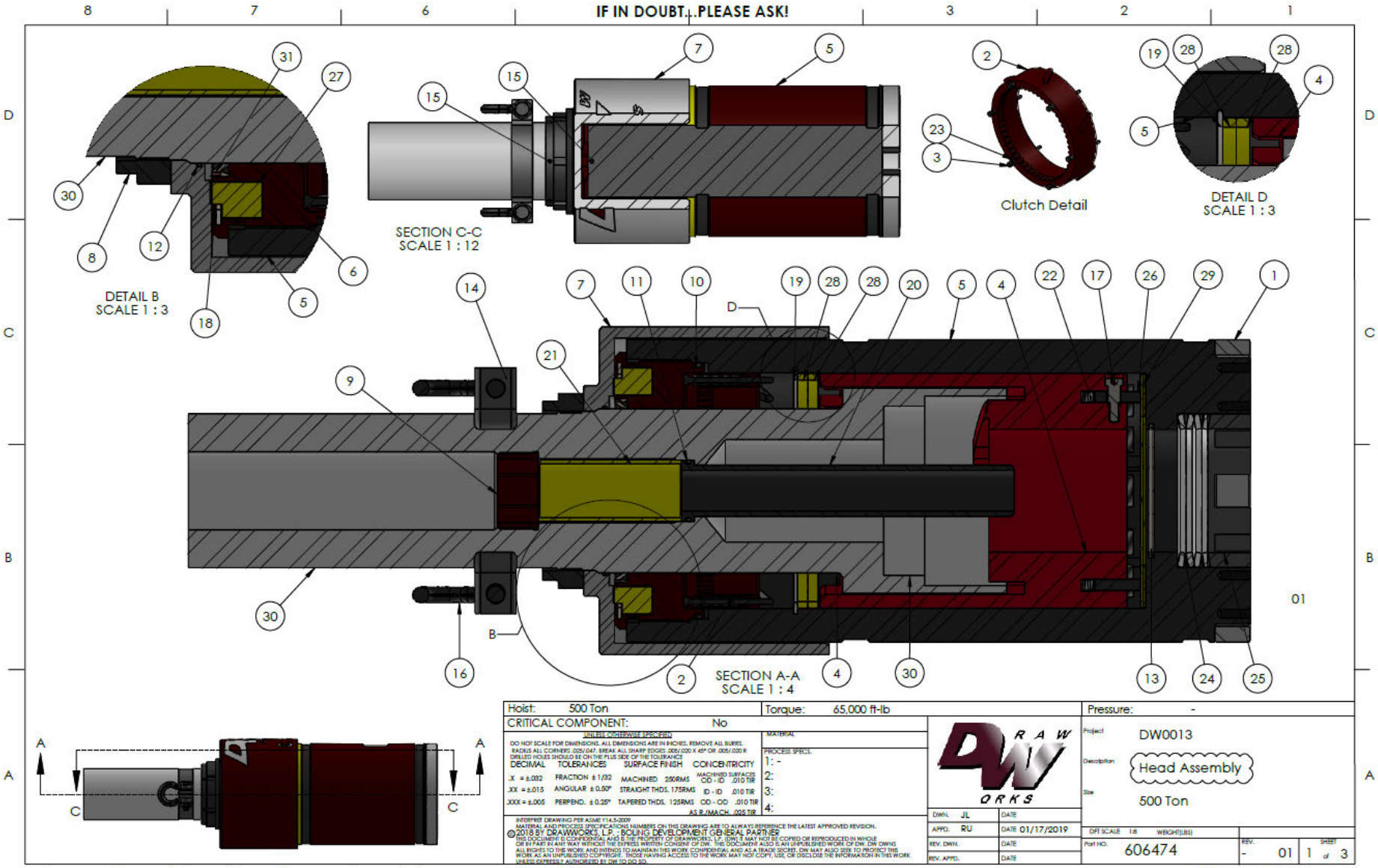

IF IN DOUBT...PLEASE ASK!

ITEM NO.	PART NUMBER	DESCRIPTION	Toolbox Size	QTY.
1	605398	Cable Guide Cover		1
2	605620	Clutch		1
3	605749	Clutch Spring Alignment Pin		6
4	606041	Dovetail Mandrel Nut		1
5	606473	Housing		1
6	605016	Housing Cap		1
7	605390	Indicator		1
8	605018	Indicator Nut		1
9	604079	Locking Nut		1
10	700600	O-Ring	2-453	1
11	700601	O-Ring	2-334	1
12	700602	O-Ring	2-266	1
13	700800	PolyPak	6.500ODx6.000ID	1
14	605318	Safety Clamp		2
15	700002	Set Screw	3/8-16 x 5/8	12
16	701160	Shackle	3/4" 4-3/4 Ton	2
17	700000	Shoulder Bolt	1/2-13 x 5/8 SL1	5
18	701201	Snap Ring	12.50ODx11.38ID	1
19	701200	Snap Ring	12ODx10.88ID	1
20	605739	Snorkel		1
21	605113	Spacer		1
22	701250	Spring		10
23	700110	Spring		6
24	605721	Spring		4
25	605720	Spring Plate		1
26	605020	Spring Retaining Cage		1
27	605222	Thrust Bearing		1
28	605686	Thrust Ring		2
29	605022	Thrust Washer		2
30	60590X	Top Mandrel		1
31	700801	Wiper Seal	9.00ODx8.00ID	1

PART NUMBER	DESCRIPTION	Toolbox Size	Redress Kit 606476/Redress Kit /QTY.	Rebuild Kit 606475/Rebuild Kit/QTY.	Overhaul Kit 606477/Overhaul Kit/QTY.
605749	Clutch Spring Alignment Pin		-	-	6
700600	O-Ring	2-453	1	1	1
700601	O-Ring	2-334	1	1	1
700602	O-Ring	2-266	1	1	1
700800	PolyPak	6.500ODx6.000ID	1	1	1
700002	Set Screw	3/8-16 x 5/8	-	12	12
700000	Shoulder Bolt	1/2-13 x 5/8 SL1	-	-	5
701201	Snap Ring	12.50ODx11.38ID	-	1	1
701200	Snap Ring	12ODx10.88ID	-	1	1
605721	Spring		-	-	4
701250	Spring		-	-	10
700110	Spring		-	-	6
605686	Thrust Ring		-	-	2
605022	Thrust Washer		-	-	2
700801	Wiper Seal	9.00ODx8.00ID	1	1	1

Internal Spring Valve
Part Number 602870
Can Replace Item # 605113

ITEM NO.	PART NUMBER	DESCRIPTION	Options/QTY.
50	605118	Safety Ring	1

Notes:
1. Refer to 60590X for available connections.
2. Safety ring available in place of cable guide cover.

Hoist: 500 Ton | Torque: 65,000 ft-lb | Pressure: -

CRITICAL COMPONENT: No

UNLESS OTHERWISE SPECIFIED
DO NOT SCALE FOR DIMENSIONS. ALL DIMENSIONS ARE IN INCHES. REMOVE ALL BURRS. RADIUS ALL CORNERS .005/.047. BREAK ALL SHARP EDGES .005/.020 X 45° OR .005/.020 R DRILLED HOLES SHOULD BE ON THE PLUS SIDE OF THE TOLERANCE

DECIMAL TOLERANCES		SURFACE FINISH	CONCENTRICITY
.X = ±.032	FRACTION ± 1/32	MACHINED 250RMS	MACHINED SURFACES OD - ID .010 TIR
.XX = ±.015	ANGULAR ± 0.50°	STRAIGHT THDS. 175RMS	ID - ID .010 TIR
.XXX = ±.005	PERPEND. ± 0.25°	TAPERED THDS. 125RMS	OD - OD .010 TIR
			AS R./MACH. .025 TIR

MATERIAL
PROCESS SPECS.
1: -
2:
3:
4:

INTERPRET DRAWING PER ASME Y14.5-2009
MATERIAL AND PROCESS SPECIFICATIONS NUMBERS ON THIS DRAWING ARE TO ALWAYS REFERENCE THE LATEST APPROVED REVISION.

©2018 BY DRAWWORKS, L.P. - BOUNG DEVELOPMENT GENERAL PARTNER
THIS DOCUMENT IS CONFIDENTIAL AND IS THE PROPERTY OF DRAWWORKS, L.P. (DW). IT MAY NOT BE COPIED OR REPRODUCED IN WHOLE OR IN PART IN ANY WAY WITHOUT THE EXPRESS WRITTEN CONSENT OF DW. THIS DOCUMENT ALSO IS AN UNPUBLISHED WORK OF DW. DW OWNS ALL RIGHTS TO THE WORK AND INTENDS TO MAINTAIN THIS WORK CONFIDENTIAL AND AS A TRADE SECRET. DW MAY ALSO SEEK TO PROTECT THIS WORK AS AN UNPUBLISHED COPYRIGHT. THOSE HAVING ACCESS TO THE WORK MAY NOT COPY, USE, OR DISCLOSE THE INFORMATION IN THIS WORK UNLESS EXPRESSLY AUTHORIZED BY DW TO DO SO.

DWN.	JL	DATE	
APPD.	RU	DATE	01/17/2019
REV. DWN.		DATE	
REV. APPD.		DATE	

Project: DW0013
Description: Head Assembly
Size: 500 Ton
DFT SCALE 1:8 WEIGHT(LBS)
Part NO. 606474 | REV. - 01 | SHEET 2 of 3

C:\DW_Vault\DW Jobs\Handling Tools\DW0013\CAD Files\

Printed copy is **UNCONTROLLED**

10.1.2 Head Assembly Shorty, 500 Ton

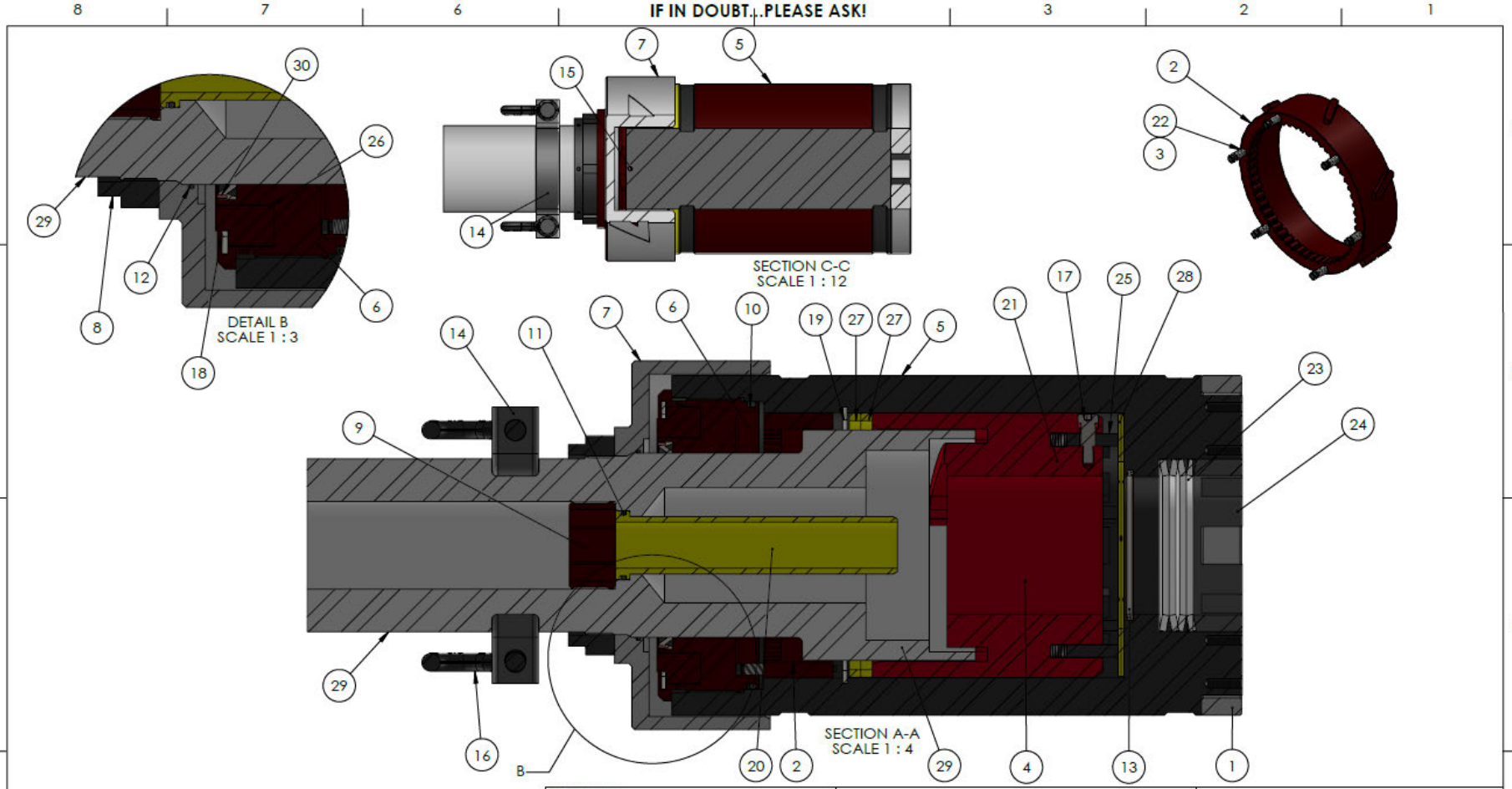

Hoist: 500 Ton | Torque: 65,000 ft-lb | Pressure: -

CRITICAL COMPONENT: No

UNLESS OTHERWISE SPECIFIED

DO NOT SCALE FOR DIMENSIONS. ALL DIMENSIONS ARE IN INCHES. REMOVE ALL BURRS. RADIUS ALL CORNERS .025/.047. BREAK ALL SHARP EDGES .005/.020 X 45° OR .005/.020 R DRILLED HOLES SHOULD BE ON THE PLUS SIDE OF THE TOLERANCE

DECIMAL TOLERANCES		SURFACE FINISH	CONCENTRICITY
.X = ±.032	FRACTION ± 1/32	MACHINED 250RMS	MACHINED SURFACES OD - ID .010 TIR
.XX = ±.015	ANGULAR ± 0.50°	STRAIGHT THDS. 175RMS	ID - ID .010 TIR
.XXX = ±.005	PERPEND. ± 0.25°	TAPERED THDS. 125RMS	OD - OD .010 TIR
			AS R /MACH. .005 TIR

MATERIAL

PROCESS SPECS.
1: -
2:
3:
4:

INTERPRET DRAWING PER ASME Y14.5-2009
MATERIAL AND PROCESS SPECIFICATIONS NUMBERS ON THIS DRAWING ARE TO ALWAYS REFERENCE THE LATEST APPROVED REVISION.

©2018 BY DRAWWORKS, L.P. : BOUNG DEVELOPMENT GENERAL PARTNER
THIS DOCUMENT IS CONFIDENTIAL AND IS THE PROPERTY OF DRAWWORKS, L.P. (DW). IT MAY NOT BE COPIED OR REPRODUCED IN WHOLE OR IN PART IN ANY WAY WITHOUT THE EXPRESS WRITTEN CONSENT OF DW. THIS DOCUMENT ALSO IS AN UNPUBLISHED WORK OF DW. DW OWNS ALL RIGHTS TO THIS WORK AND INTENDS TO MAINTAIN THIS WORK CONFIDENTIAL AND AS A TRADE SECRET. DW MAY ALSO SEEK TO PROTECT THIS WORK AS AN UNPUBLISHED COPYRIGHT. THOSE HAVING ACCESS TO THE WORK MAY NOT COPY, USE, OR DISCLOSE THE INFORMATION IN THIS WORK UNLESS EXPRESSLY AUTHORIZED BY DW TO DO SO.

DWN.	JL	DATE	
APPD.	RU	DATE	01/17/2019
REV. DWN.		DATE	
REV. APPD.		DATE	

Project: DW0013
Description: Head Assembly Shorty
Size: 500 Ton
DFT SCALE: 1:8 WEIGHT(LBS):
Part NO.: 606479 REV.: - 01 SHEET 1 of 3

C:\DW_Vault\DW Jobs\Handling Tools\DW0013\CAD Files\Shorty\

Printed copy is **UNCONTROLLED**

IF IN DOUBT...PLEASE ASK!

ITEM NO.	PART NUMBER	DESCRIPTION	Toolbox Size	QTY.
1	605398	Cable Guide Cover		1
2	605620	Clutch		1
3	605749	Clutch Spring Alignment Pin		6
4	606282	Dovetail Mandrel Nut - Locking		1
5	606478	Housing		1
6	605016	Housing Cap		1
7	605650	Indicator		1
8	605018	Indicator Nut		1
9	604079	Locking Nut		1
10	700600	O-Ring	2-453	1
11	700601	O-Ring	2-334	1
12	700602	O-Ring	2-266	1
13	700800	PolyPak	6.500ODx6.000ID	1
14	605318	Safety Clamp		2
15	700002	Set Screw	3/8-16 x 5/8	12
16	701160	Shackle	3/4" 4-3/4 Ton	2
17	700000	Shoulder Bolt	1/2-13 x 5/8 SL 1	5
18	701201	Snap Ring	12.50ODx11.38ID	1
19	701200	Snap Ring	12ODx10.88ID	1
20	605792	Snorkel		1
21	701250	Spring		10
22	700110	Spring		6
23	605721	Spring		4
24	605720	Spring Plate		1
25	605020	Spring Retaining Cage		1
26	605222	Thrust Bearing		1
27	605686	Thrust Ring		2
28	605022	Thrust Washer		2
29	60629X	Top Mandrel		1
30	700801	Wiper Seal	9.00ODx8.00ID	1

PART NUMBER	DESCRIPTION	Toolbox Size	Rebuild Kit 606475/Rebuild Kit/QTY.	Redress Kit 606476/Redress Kit/QTY.	Overhaul Kit 606477/Overhaul Kit/QTY.
605749	Clutch Spring Alignment Pin		-	-	6
700600	O-Ring	2-453	1	1	1
700601	O-Ring	2-334	1	1	1
700602	O-Ring	2-266	1	1	1
700800	PolyPak	6.500ODx6.000ID	1	1	1
700002	Set Screw	3/8-16 x 5/8	12	-	12
700000	Shoulder Bolt	1/2-13 x 5/8 SL 1	-	-	5
701201	Snap Ring	12.50ODx11.38ID	-	-	1
701200	Snap Ring	12ODx10.88ID	-	-	1
701250	Spring		-	-	10
700110	Spring		-	-	6
605721	Spring		-	-	4
605022	Thrust Washer		-	-	2
700801	Wiper Seal	9.00ODx8.00ID	1	1	1

ITEM NO.	PART NUMBER	DESCRIPTION	Options/QTY.
50	605118	Safety Ring	1

Notes:
1. Refer to 60629X for available connections.
2. Safety ring available in place of cable guide cover.

Hoist: 500 Ton | Torque: 65,000 ft-lb | Pressure: -

CRITICAL COMPONENT: No

UNLESS OTHERWISE SPECIFIED
DO NOT SCALE FOR DIMENSIONS. ALL DIMENSIONS ARE IN INCHES. REMOVE ALL BURRS. RADIUS ALL CORNERS .025/.047. BREAK ALL SHARP EDGES .005/.020 X 45° OR .005/.020 R DRILLED HOLES SHOULD BE ON THE PLUS SIDE OF THE TOLERANCE

DECIMAL TOLERANCES		SURFACE FINISH		CONCENTRICITY	
.X = ±.032	FRACTION ± 1/32	MACHINED	250RMS	MACHINED SURFACES OD - ID	.010 TIR
.XX = ±.015	ANGULAR ± 0.50°	STRAIGHT THDS.	175RMS	ID - ID	.010 TIR
.XXX = ±.005	PERPEND. ± 0.25°	TAPERED THDS.	125RMS	OD - OD	.010 TIR
				AS R /MACH.	.005 TIR

MATERIAL
PROCESS SPECS.
1: -
2:
3:
4:

INTERPRET DRAWING PER ASME Y14.5-2009
MATERIAL AND PROCESS SPECIFICATIONS NUMBERS ON THIS DRAWING ARE TO ALWAYS REFERENCE THE LATEST APPROVED REVISION.

©2018 BY DRAWWORKS, L.P. - BOLING DEVELOPMENT GENERAL PARTNER
THIS DOCUMENT IS CONFIDENTIAL AND IS THE PROPERTY OF DRAWWORKS, L.P. (DW). IT MAY NOT BE COPIED OR REPRODUCED IN WHOLE OR IN PART IN ANY WAY WITHOUT THE EXPRESS WRITTEN CONSENT OF DW. THIS DOCUMENT ALSO IS AN UNPUBLISHED WORK OF DW. DW OWNS ALL RIGHTS TO THIS WORK AND INTENDS TO MAINTAIN THIS WORK CONFIDENTIAL AND AS A TRADE SECRET. DW MAY ALSO SEEK TO PROTECT THIS WORK AS AN UNPUBLISHED COPYRIGHT. THOSE HAVING ACCESS TO THE WORK MAY NOT COPY, USE, OR DISCLOSE THE INFORMATION IN THIS WORK UNLESS EXPRESSLY AUTHORIZED BY DW TO DO SO.

DRAWORKS

DWN.	JL	DATE	
APPD.	RU	DATE	01/17/2019
REV. DWN.		DATE	
REV. APPD.		DATE	

Project: DW0013
Description: Head Assembly Shorty
Size: 500 Ton
DFT SCALE 1:8 WEIGHT(LBS)
Part NO. 606479 | REV. - 01 | SHEET 2 of 3

C:\DW_Vault\DW Jobs\Handling Tools\DW0013\CAD Files\Shorty\

Printed copy is **UNCONTROLLED**

10.1.3 DWCRT 1,000 Ton Assembly

IF IN DOUBT...PLEASE ASK!

Tubular Size	Weight Range	Casing ID (in.)	API 8C Hoist Capacity (Tons)	Torque Capacity (Locked ft-lb)	Torque Capacity (Unlocked ft-lb)	Set Down Weight (Tons)	Minimum ID (in.)	Flow Rate (brl/min)	OAL (in.)	OAL w/ Autovalve (in.)	Aprox Weight (lbs.)
7"	17-35#	6.538 - 6.004	400	60,000	20,000	50	1.5	12	122	137	2950
7-5/8"	39-55.3#	6.625 - 6.125	500	65,000	25,000	50	1.5	12	122	137	3000
9-5/8"	36 -59.4 #	8.921 - 8.407	1000	100,000	75,000	50	2.25	20	130	153	3350
9-7/8"	62.8 #	8.625	1000	100,000	75,000	50	2.25	20	130	153	3350
10-3/4"	40.5 - 60.7#	10.050 - 9.660	1000	100,000	75,000	50	2.25	20	130	153	3580
11-3/4"	47 - 71#	11.000 - 10.586	1000	100,000	75,000	50	2.25	20	130	153	3600
13-3/8"	54.4 - 85#	12.615 - 12.159	1000	100,000	75,000	50	2.25	20	130	153	4000
13-5/8"	88.2#	12.375	1000	100,000	75,000	50	2.25	20	130	153	4000
16"	65 -109#	15.250 - 14.688	1000	100,000	75,000	50	2.25	20	135	162	4400
16-3/4"	65 - 109#	16.250 - 15.750	1000	100,000	75,000	50	2.25	20	135	162	4500
18-5/8"	87.5 - 136#	17.755 - 17.239	1000	100,000	75,000	50	2.25	20	135	162	5050
20"	94 - 133#	19.124 - 18.730	1000	100,000	75,000	50	2.25	20	135	162	5300
20"	163-187#	18.625 - 18.125	1000	100,000	75,000	50	2.25	20	135	162	5350
22"	170-224#	20.438 - 19.938	1000	100,000	75,000	50	2.25	20	138	N/A	5850
24"	171-216#	22.685 - 22.185	1000	100,000	75,000	50	2.25	20	138	N/A	6500
26"	202-275#	24.550 - 24.050	1000	100,000	75,000	50	2.25	20	138	N/A	7100

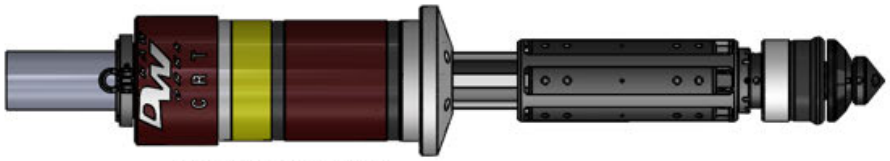

1000 Ton 13-3/8" Display

Hoist: | Torque: | Pressure:

CRITICAL COMPONENT:

DO NOT SCALE FOR DIMENSIONS. ALL DIMENSIONS ARE IN INCHES. REMOVE ALL BURRS. RADIUS ALL CORNERS .005/.015. BREAK ALL SHARP EDGES .005/.030 X 45° OR .005/.030 R. DRILLED HOLES SHOULD BE ON THE PLUS SIDE OF THE TOLERANCE

DECIMAL TOLERANCES: .X = ±.032; .XX = ±.015; .XXX = ±.005 PERPEND. ± 0.25°; FRACTION ± 1/32; ANGULAR ± 0.50°

SURFACE FINISH: MACHINED 250RMS; STRAIGHT THDS. 175RMS; TAPERED THDS. 125RMS

CONCENTRICITY: MACHINED SURFACES CO - ID .010 TIR; ID - ID .010 TIR; CO - CO .010 TIR AS R/MACH. .025 TIR

1:
2:
3:
4:

INTERPRET DRAWING PER ASME Y14.5-2009

MATERIAL AND PROCESS SPECIFICATIONS NUMBERS ON THIS DRAWING ARE TO ALWAYS REFERENCE THE LATEST APPROVED REVISION.

© 2017 DW WORKS, LLC. ALL RIGHTS RESERVED. DO NOT COPY OR REPRODUCE IN WHOLE OR IN PART IN ANY WAY WITHOUT THE EXPRESS WRITTEN CONSENT OF DW. THIS DOCUMENT AND/OR ANY UNPUBLISHED WORK OF DW, BY GIVING ALL RIGHTS TO THIS WORK AND INTENDS TO MAINTAIN THIS WORK CONFIDENTIAL AND AS A TRADE SECRET. DW MAY ALSO SEEK TO PROTECT THE WORK VIA ANY OTHER INTELLECTUAL PROPERTY RIGHTS. HOWEVER, THIS ALLOWS US THE FLEXIBILITY NOT TO DISCLOSE THE INFORMATION IN THIS WORK UNLESS EXPRESSLY AUTHORIZED BY DW TO DO SO.

DRAWN	MH	DATE 2/23/2017
APPD	RU	DATE 1/4/2019
REV. DWN.	JL	DATE 01/21/2019
REV. APPD.	RU	DATE 01/21/2019

Project: DW0004

Description: DWCRT1K Assembly

Size: 7"-26"

DRAWING SCALE: 1:14 WEIGHT (LBS):

Part NO.: 605444 | REV.: A | SHEET 1 of 2

C:\DW_Vault\DW Jobs\Handling Tools\DW0004\CAD Files\

Printed copy is

IF IN DOUBT.. PLEASE ASK!

ITEM NO.	PART NUMBER	DESCRIPTION	Size	Head Assemblies/QTY.
1	606521	Head Assembly	1000 Ton	1

ITEM NO.	PART NUMBER	DESCRIPTION	Size	Circulator Assemblies/QTY.
20	605071	Circulator Assembly	7" 7-5/8"	1
21	605494	Circulator Assembly	9-5/8"-13-3/8"	1
22	605495	Circulator Assembly	16"-20"	1
23	605550	Circulator Assembly	22"-26"	1

ITEM NO.	PART NUMBER	DESCRIPTION	Size	Gripping Assembly/QTY.
10	606289	Internal Grip Assembly	7"-26"	1

See Note 1

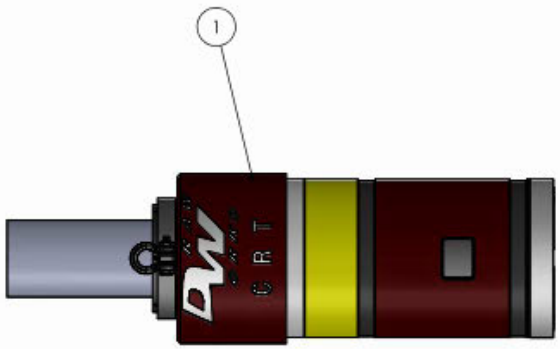

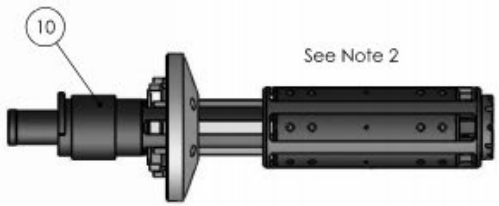

See Note 2

Notes:
1. Select one each for a complete tool: Head Assembly, Gripping Assembly, Circulator Assembly.
   1. Not all components can be used together.
2. Refer to 606289 for other internal gripping assembly sizes.

Hoist: | Torque: | Pressure:

CRITICAL COMPONENT:

UNLESS OTHERWISE SPECIFIED
DO NOT SCALE FOR DIMENSIONS. ALL DIMENSIONS ARE IN INCHES. REMOVE ALL BURRS. RADIUS ALL CORNERS .005/.047. BREAK ALL SHARP EDGES .005/.020 X 45° OR .005/.020 R. DRILLED HOLES SHOULD BE ON THE PLUS SIDE OF THE TOLERANCE.

DECIMAL TOLERANCES		SURFACE FINISH		CONCENTRICITY	
.X = ±.032	FRACTION ± 1/32	MACHINED	250RMS	MACHINED SURFACES OD - ID	.010 TIR
.XX = ±.015	ANGULAR ± 0.50°	STRAIGHT THDS.	175RMS	ID - ID	.010 TIR
.XXX = ±.005	PERPEND. ± 0.25°	TAPERED THDS.	125RMS	OD - OD	.010 TIR
				AS IS MACH.	.025 TIR

MATERIAL
PROCESS SPECS.
1:
2:
3:
4:

INTERPRET DRAWING PER ASME Y14.5-2009
MATERIAL AND PROCESS SPECIFICATIONS NUMBERED ON THIS DRAWING ARE TO ALWAYS REFERENCE THE LATEST APPROVED REVISION.

©2018 BY DRAWYWORKS, L.P.; BOLING DEVELOPMENT GENERAL PARTNER
THIS DOCUMENT IS CONFIDENTIAL AND IS THE PROPERTY OF DRAWYWORKS, L.P. (DW). IT MAY NOT BE COPIED OR REPRODUCED IN WHOLE OR IN PART IN ANY WAY WITHOUT THE EXPRESS WRITTEN CONSENT OF DW. THIS DOCUMENT ALSO IS AN UNPUBLISHED WORK OF DW. DW OWNS ALL RIGHTS TO THIS WORK AND INTENDS TO MAINTAIN THIS WORK CONFIDENTIAL AND AS A TRADE SECRET. DW MAY ALSO SEEK TO PROTECT THIS WORK AS AN UNPUBLISHED COPYRIGHT. THOSE HAVING ACCESS TO THE WORK MAY NOT COPY, USE, OR DISCLOSE THE INFORMATION IN THIS WORK UNLESS EXPRESSLY AUTHORIZED BY DW TO DO SO.

DWN. MH	DATE 2/23/2017	
APPD. RU	DATE 1/4/2019	
REV. DWN. JL	DATE 01/21/2019	
REV. APPD. RU	DATE 01/21/2019	

Project: DW0004
Description: DWCRT1K Assembly
Size: 7"-26"
DPT SCALE: 1:16 WEIGHT(LBS):
Part NO.: 605444 | REV. A | SHEET 2 of 2

C:\dw_vault\dw jobs\handling tools\dw0004\cad files\

Printed copy is **UNCONTROLLED**

10.1.4 Head Assembly, 1,000 Ton

IF IN DOUBT...PLEASE ASK!

ITEM NO.	PART NUMBER	DESCRIPTION	Toolbox Size	Collapsed/QTY.
1	605752	Cable Guide Cover		1
2	605621	Clutch		1
3	605749	Clutch Spring Alignment Pin		6
4	606472	Dovetail Mandrel Nut		1
5	606520	Housing		1
6	605453	Housing Cap		1
7	605460	Indicator		1
8	605450	Indicator Nut		1
9	605500	Locking Nut		1
10	700618	O-Ring	2-340	1
11	700617	O-Ring	2-272	1
12	700619	O-Ring	2-459	1
13	700807	PolyPak	9.00ODx8.375ID	1
14	605469	Safety Hanger Swivel		1
15	701352	Set Screw	3/8-16 x 3/4	12
16	701160	Shackle	3/4" 4-3/4 Ton	2
17	700000	Shoulder Bolt	1/2-13 x 5/8 SL 1	6
18	701205	Snap Ring	14.21ODx12.88ID	1
19	701204	Snap Ring	15.15ODx13.65ID	1
20	605451	Snorkel		1
21	605501	Snorkel Spacer		1
22	701250	Spring		12
23	700110	Spring		6
24	606456	Spring		3
25	606409	Spring Plate		1
26	605454	Spring Retaining Cage		1
27	605458	Thrust Bearing		1
28	605743	Thrust Ring		2
29	606262	Thrust Washer		2
30	60648X	Top Mandrel		1
31	700806	Wiper Seal	10.50ODx9.50ID	1

ITEM NO.	PART NUMBER	DESCRIPTION	Options/QTY.
50	605655	Safety Ring	1

PART NUMBER	DESCRIPTION	606251 Overhaul Kit/Overhaul Kit/QTY.	606252 Rebuild Kit/Rebuild Kit/QTY.	606253 Redress Kit/Redress Kit/QTY.
605749	Clutch Spring Alignment Pin	6	-	-
700618	O-Ring	1	1	1
700617	O-Ring	1	1	-
700619	O-Ring	1	1	-
700807	PolyPak	1	1	1
701350	Set Screw	6	6	-
700002	Set Screw	6	6	-
700000	Shoulder Bolt	6	-	-
701205	Snap Ring	1	-	-
701204	Snap Ring	1	-	-
701250	Spring	12	-	-
606456	Spring	3	-	-
700110	Spring	6	-	-
606262	Thrust Washer	2	-	-
700806	Wiper Seal	1	1	-

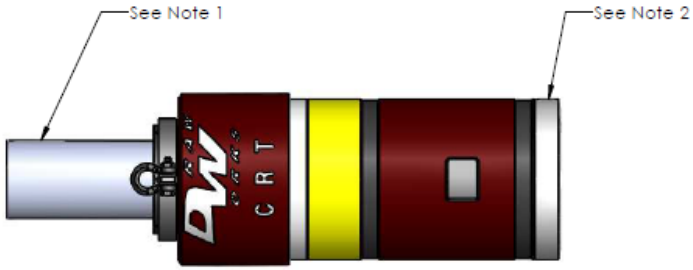

Notes:
1.Refer to 60648X for available connections.
2. Safety ring available in place of cable guide cover.

Hoist: 1000 Ton
Torque: 75,000 ft-lb
Pressure: -
CRITICAL COMPONENT: No
Material <not specified>
Project: DW0004
Description: Head Assembly
Size: 1000 Ton
DWN. JL
APPD. RU DATE 01/21/2019
REV. DWN. CH DATE 05/01/2019
REV. APPD. RU DATE 05/01/2019
Part NO. 606521
SHEET 2 of 2

C:\dw_vault\dw jobs\handling tools\dw0004\cad files\

Printed copy is UNCONTROLLED

IF IN DOUBT...PLEASE ASK!

ITEM NO.	PART NUMBER	DESCRIPTION	Toolbox Size	Collapsed/QTY.
1	605752	Cable Guide Cover		1
2	605621	Clutch		1
3	605749	Clutch Spring Alignment Pin		6
4	606472	Dovetail Mandrel Nut		1
5	606520	Housing		1
6	605453	Housing Cap		1
7	605460	Indicator		1
8	605450	Indicator Nut		1
9	605500	Locking Nut		1
10	700618	O-Ring	2-340	1
11	700617	O-Ring	2-272	1
12	700619	O-Ring	2-459	1
13	700807	PolyPak	9.00ODx8.375ID	1
14	605469	Safety Hanger Swivel		1
15	701352	Set Screw	3/8-16 x 3/4	12
16	701160	Shackle	3/4" 4-3/4 Ton	2
17	700000	Shoulder Bolt	1/2-13 x 5/8 SL 1	6
18	701205	Snap Ring	14.21ODx12.88ID	1
19	701204	Snap Ring	15.15ODx13.65ID	1
20	605451	Snorkel		1
21	605501	Snorkel Spacer		1
22	701250	Spring		12
23	700110	Spring		6
24	606456	Spring		3
25	606409	Spring Plate		1
26	605454	Spring Retaining Cage		1
27	605458	Thrust Bearing		1
28	605743	Thrust Ring		2
29	606262	Thrust Washer		2
30	60648X	Top Mandrel		1
31	700806	Wiper Seal	10.50ODx9.50ID	1

ITEM NO.	PART NUMBER	DESCRIPTION	Options/QTY.
50	605655	Safety Ring	1

PART NUMBER	DESCRIPTION	606251 Overhaul Kit/Overhaul Kit/QTY.	606252 Rebuild Kit/Rebuild Kit/QTY.	606253 Redress Kit/Redress Kit/QTY.
605749	Clutch Spring Alignment Pin	6	-	-
700618	O-Ring	1	1	1
700617	O-Ring	1	1	-
700619	O-Ring	1	1	-
700807	PolyPak	1	1	1
701350	Set Screw	6	6	-
700002	Set Screw	6	6	-
700000	Shoulder Bolt	6	-	-
701205	Snap Ring	1	-	-
701204	Snap Ring	1	-	-
701250	Spring	12	-	-
606456	Spring	3	-	-
700110	Spring	6	-	-
606262	Thrust Washer	2	-	-
700806	Wiper Seal	1	1	-

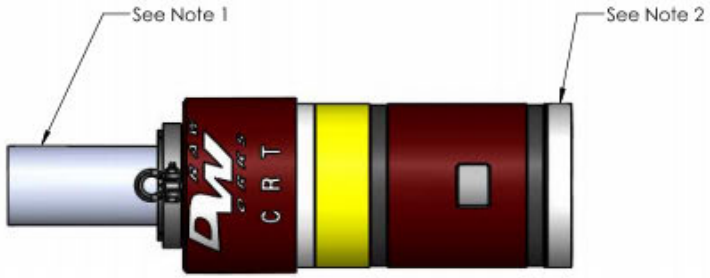

Notes:
1.Refer to 60648X for available connections.
2. Safety ring available in place of cable guide cover.

Hoist: 1000 Ton
Torque: 75,000 ft-lb
Pressure: -
CRITICAL COMPONENT: No
Material <not specified>
Project: DW0004
Description: Head Assembly
Size: 1000 Ton
DWN. JL
APPD. RU DATE 01/21/2019
REV. DWN. CH DATE 05/01/2019
REV. APPD. RU DATE 05/01/2019
Part NO. 606521
SHEET 2 of 2

©2018 BY DRAWYWORKS, L.P. - BOUNCE DEVELOPMENT GENERAL PARTNER

C:\dw_vault\dw jobs\handling tools\dw0004\cad files\

Printed copy is **UNCONTROLLED**

10.2 Internal Gripping Assembly, 4-1/2” – 20”

IF IN DOUBT...PLEASE ASK!

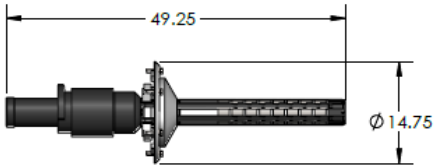

140 Ton 4-1/2" 9.5-15.10# Display

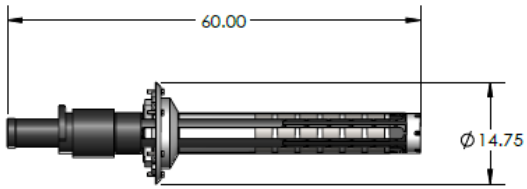

450 Ton 7" 17-35# Display

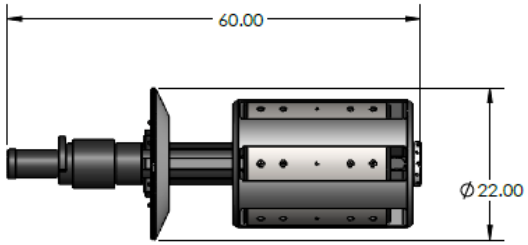

450 Ton 20" 94-133# Display

Casing Range	Tension (Tons)	Torque (ft-lb.)	OAL w/circulator and Standard Head(ft)
4-1/2" 9.5-15.10#	140	13,000	8.6
5" 18-23.2#	160	15,000	8.6
5-1/2" 15.5-26.8#	225	25,000	8.9
5-1/2" 15.5-23#	255	25,000	8.9
5-1/2" 20-23#	300	30,000	8.9
6" 20-24.5#	430	30,000	9
6-5/8" 20-36.7#	370	50,000	9.6
7" 17-35# 7-5/8" 24-42.8#	450	65,000	9.6
8-5/8" 24-44# 9-5/8" 36-59.4# 10-3/4" 40.5- 60.7# 11-3/4" 47-71# 13-3/8" 54.4-85#	450	65,000	9.7
16" 65-109# 16-3/4" 65-109# 18-5/8" 87.5-117# 20" 94-133#	450	65,000	10

All Configurations will need CRT Head and a Circulator Assembly

CRITICAL COMPONENT: No

UNLESS OTHERWISE SPECIFIED

DO NOT SCALE FOR DIMENSIONS. ALL DIMENSIONS ARE IN INCHES. REMOVE ALL BURRS. RADIUS ALL CORNERS .025/.047. BREAK ALL SHARP EDGES .005/.020 X 45° OR .005/.020 R DRILLED HOLES SHOULD BE ON THE PLUS SIDE OF THE TOLERANCE

DECIMAL TOLERANCES		SURFACE FINISH	CONCENTRICITY
.X = ±.032	FRACTION ± 1/32	MACHINED 250RMS	MACHINED SURFACES OD - ID .010 TIR
.XX = ±.015	ANGULAR ± 0.50°	STRAIGHT THDS. 175RMS	ID - ID .010 TIR
.XXX = ±.005	PERPEND. ± 0.25°	TAPERED THDS. 125RMS	OD - OD .010 TIR
		AS R./MACH. .005 TIR	

MATERIAL

PROCESS SPECS.
1: -
2:
3:
4:

INTERPRET DRAWING PER ASME Y14.5-2009

MATERIAL AND PROCESS SPECIFICATIONS NUMBERS ON THIS DRAWING ARE TO ALWAYS REFERENCE THE LATEST APPROVED REVISION.

©2018 BY DRAWWORKS, L.P. ; BOLING DEVELOPMENT GENERAL PARTNER

THIS DOCUMENT IS CONFIDENTIAL AND IS THE PROPERTY OF DRAWWORKS, L.P. (DW). IT MAY NOT BE COPIED OR REPRODUCED IN WHOLE OR IN PART IN ANY WAY WITHOUT THE EXPRESS WRITTEN CONSENT OF DW. THIS DOCUMENT ALSO IS AN UNPUBLISHED WORK OF DW. DW OWNS ALL RIGHTS TO THIS WORK AND INTENDS TO MAINTAIN THIS WORK CONFIDENTIAL AND AS A TRADE SECRET. DW MAY ALSO SEEK TO PROTECT THIS WORK AS AN UNPUBLISHED COPYRIGHT. THOSE HAVING ACCESS TO THE WORK MAY NOT COPY, USE, OR DISCLOSE THE INFORMATION IN THIS WORK UNLESS EXPRESSLY AUTHORIZED BY DW TO DO SO.

DRAWORKS

DWN.	JL	DATE	8/31/2018
APPD.	TF	DATE	9/25/2018
REV. DWN.		DATE	
REV. APPD.		DATE	

Project: DW0013

Description: Internal Gripping Assembly

Size: 4-1/2" 20"

DFT SCALE 1:16 WEIGHT(LBS)

Part NO. 605730 REV. - SHEET 1 of 13

C:\dw_vault\dw jobs\handling tools\dw0013\cad files\

Printed copy is **UNCONTROLLED**

IF IN DOUBT...PLEASE ASK!

ITEM NO.	PART NUMBER	DESCRIPTION	Size	Toolbox Size	4.5" 9.5-15.10/QTY.
1	605328	Bump Plate	4-1/2"-5"		1
2	606105	Dovetail Mandrel	4-1/2" 9.5-15.1# 140 Ton		1
3	700500	Lock Washer Internal Teeth			6
4	700802	PolyPak		3.00ODx2.500ID	1
5	700008	Safety Bolt		1/2-13 x 2	6
6	701352	Set Screw		3/8-16 x 3/4	6
7	605109	Slip	4-1/2" 9.5-15.1#		6
8	701254	Spring			6

Redress Kit
Part # 606201
Contains
QTY Part #
1) 700802
6) 700500

Overhaul Kit
Part # 606205
Contains
QTY Part #
1) 606201
6) 701254
6) 700008
6) 701352

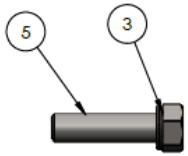

DETAIL AA
SCALE 1 : 2

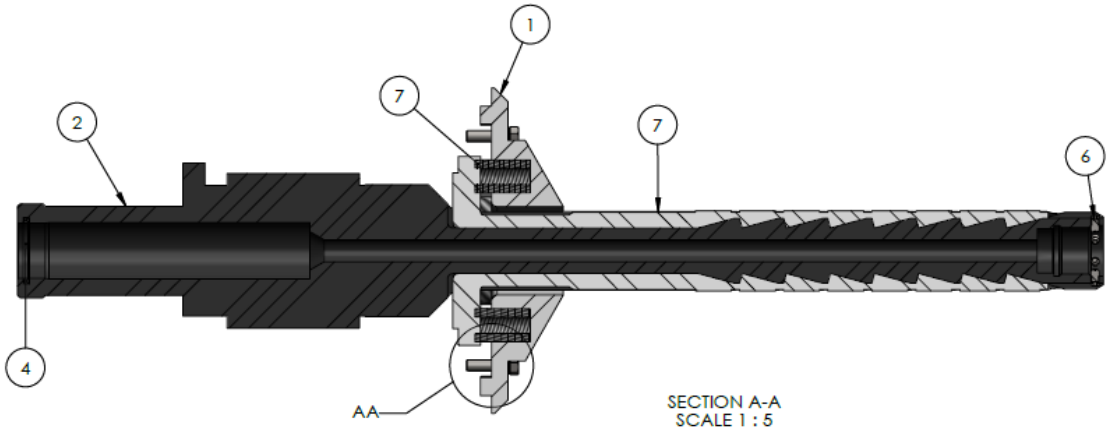

SECTION A-A
SCALE 1 : 5

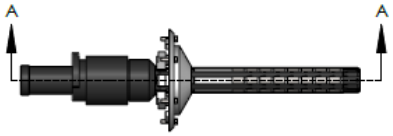

CRITICAL COMPONENT: No

UNLESS OTHERWISE SPECIFIED

DO NOT SCALE FOR DIMENSIONS. ALL DIMENSIONS ARE IN INCHES. REMOVE ALL BURRS. RADIUS ALL CORNERS .025/.047. BREAK ALL SHARP EDGES .005/.030 X 45° OR .005/.030 R DRILLED HOLES SHOULD BE ON THE PLUS SIDE OF THE TOLERANCE

DECIMAL TOLERANCES		SURFACE FINISH	CONCENTRICITY
.X = ±.032	FRACTION ± 1/32	MACHINED 250RMS	MACHINED SURFACES OD - ID .010 TIR
.XX = ±.015	ANGULAR ± 0.50°	STRAIGHT THDS. 175RMS	ID - ID .010 TIR
.XXX = ±.005	PERPEND. ± 0.25°	TAPERED THDS. 125RMS	OD - OD .010 TIR
			AS R /MACH. .025 TIR

MATERIAL

PROCESS SPECS.
1: -
2:
3:
4:

INTERPRET DRAWING PER ASME Y14.5-2009

MATERIAL AND PROCESS SPECIFICATIONS NUMBERS ON THIS DRAWING ARE TO ALWAYS REFERENCE THE LATEST APPROVED REVISION.

©2018 BY DRAWWORKS, L.P. - BOLING DEVELOPMENT GENERAL PARTNER
THIS DOCUMENT IS CONFIDENTIAL AND IS THE PROPERTY OF DRAWWORKS, L.P. (DW). IT MAY NOT BE COPIED OR REPRODUCED IN WHOLE OR IN PART IN ANY WAY WITHOUT THE EXPRESS WRITTEN CONSENT OF DW. THIS DOCUMENT ALSO IS AN UNPUBLISHED WORK OF DW. DW OWNS ALL RIGHTS TO THIS WORK AND INTENDS TO MAINTAIN THIS WORK CONFIDENTIAL AND AS A TRADE SECRET. DW MAY ALSO SEEK TO PROTECT THIS WORK AS AN UNPUBLISHED COPYRIGHT. THOSE HAVING ACCESS TO THE WORK MAY NOT COPY, USE, OR DISCLOSE THE INFORMATION IN THIS WORK UNLESS EXPRESSLY AUTHORIZED BY DW TO DO SO.

DWN.	JL	DATE	8/31/2018
APPD.	TF	DATE	9/25/2018
REV. DWN.		DATE	
REV. APPD.		DATE	

Project: DW0013

Description: Internal Gripping Assembly

Size: 4-1/2" 20" 140 Ton 4-1/2"

DFT SCALE 1:16 WEIGHT(LBS)

Part NO. 605730

REV. -

SHEET 2 of 13

C:\dw_vault\dw jobs\handling tools\dw0013\cad files\

Printed copy is **UNCONTROLLED**

IF IN DOUBT...PLEASE ASK!

ITEM NO.	PART NUMBER	DESCRIPTION	Size	Toolbox Size	5" 18-23.2/QTY.
1	605328	Bump Plate	4-1/2"-5"		1
2	606106	Dovetail Mandrel	5" 18-23.2# 160 Ton		1
3	700500	Lock Washer Internal Teeth			6
4	700802	PolyPak		3.00ODx2.500ID	1
5	700008	Safety Bolt		1/2-13 x 2	6
6	701352	Set Screw		3/8-16 x 3/4	6
7	605110	Slip	5" 18-23.2#		6
8	701254	Spring			6

Redress Kit
Part # 606209
Contains
QTY Part #
1) 700802
6) 700500

Overhaul Kit
Part # 606210
Contains
QTY Part #
1) 606209
6) 701254
6) 700008
6) 701352

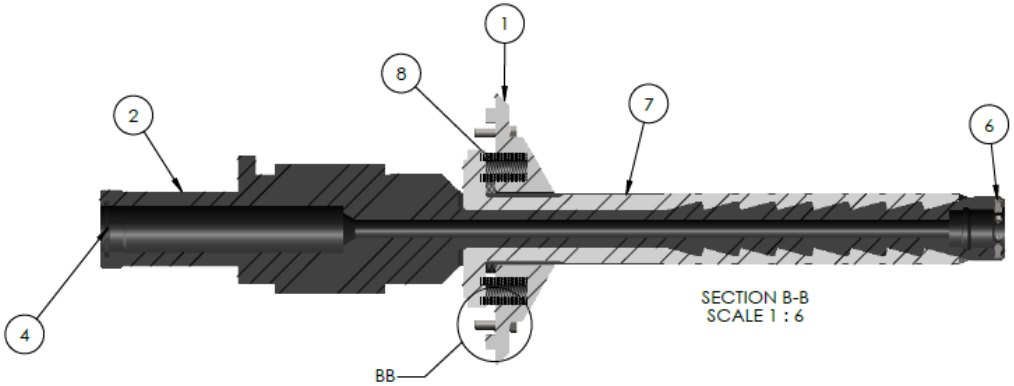

SECTION B-B
SCALE 1 : 6

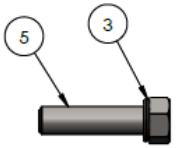

DETAIL BB
SCALE 1 : 2

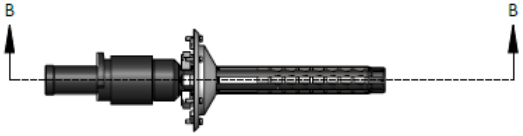

CRITICAL COMPONENT: No

UNLESS OTHERWISE SPECIFIED
DO NOT SCALE FOR DIMENSIONS. ALL DIMENSIONS ARE IN INCHES. REMOVE ALL BURRS. RADIUS ALL CORNERS .005/.047. BREAK ALL SHARP EDGES .005/.030 X 45° OR .005/.030 R DRILLED HOLES SHOULD BE ON THE PLUS SIDE OF THE TOLERANCE

DECIMAL	TOLERANCES	SURFACE FINISH	CONCENTRICITY
.X = ±.032	FRACTION ± 1/32	MACHINED 250RMS	MACHINED SURFACES OD - ID .010 TIR
.XX = ±.015	ANGULAR ± 0.50°	STRAIGHT THDS. 175RMS	ID - ID .010 TIR
.XXX = ±.005	PERPEND. ± 0.25°	TAPERED THDS. 125RMS	OD - OD .010 TIR
			AS R./MACH. .025 TIR

MATERIAL
PROCESS SPECS.
1: -
2:
3:
4:

INTERPRET DRAWING PER ASME Y14.5-2009
MATERIAL AND PROCESS SPECIFICATIONS NUMBERS ON THIS DRAWING ARE TO ALWAYS REFERENCE THE LATEST APPROVED REVISION.
©2018 BY DRAWWORKS, L.P. - BOLING DEVELOPMENT GENERAL PARTNER
THIS DOCUMENT IS CONFIDENTIAL AND IS THE PROPERTY OF DRAWWORKS, L.P. (DW). IT MAY NOT BE COPIED OR REPRODUCED IN WHOLE OR IN PART IN ANY WAY WITHOUT THE EXPRESS WRITTEN CONSENT OF DW. THIS DOCUMENT ALSO IS AN UNPUBLISHED WORK OF DW. DW OWNS ALL RIGHTS TO THIS WORK AND INTENDS TO MAINTAIN THIS WORK CONFIDENTIAL AND AS A TRADE SECRET. DW MAY ALSO SEEK TO PROTECT THIS WORK AS AN UNPUBLISHED COPYRIGHT. THOSE HAVING ACCESS TO THE WORK MAY NOT COPY, USE, OR DISCLOSE THE INFORMATION IN THIS WORK UNLESS EXPRESSLY AUTHORIZED BY DW TO DO SO.

DWN.	JL	DATE	8/31/2018
APPD.	TF	DATE	9/25/2018
REV. DWN.		DATE	
REV. APPD.		DATE	

Project: DW0013
Description: Internal Gripping Assembly
Size: 4-1/2" 20" 160 Ton 5"
DFT SCALE 1:16 WEIGHT(LBS)
Part NO. 605730
REV. -
SHEET 3 of 13

C:\dw_vault\dw jobs\handling tools\dw0013\cad files\

Printed copy is **UNCONTROLLED**

IF IN DOUBT...PLEASE ASK!

ITEM NO.	PART NUMBER	DESCRIPTION	Size	Toolbox Size	5.5" 15.5-26.8#/5.5" 15.5-26#/QTY.
1	605329	Bump Plate	5-1/2" 15.5-26#		1
2	606107	Dovetail Mandrel	5-1/2" 15.5-26.8# 225 Ton		1
3	700500	Lock Washer Internal Teeth			6
4	700802	PolyPak		3.00ODx2.500ID	1
5	700008	Safety Bolt		1/2-13 x 2	6
6	701352	Set Screw		3/8-16 x 3/4	6
7	605084	Slip	5-1/2" 15.5-26.8#		6
8	701254	Spring			6

Redress Kit
Part # 606201
Contains

QTY	Part #
1)	700802
6)	700500

Overhaul Kit
Part # 606205
Contains

QTY	Part #
1)	606201
6)	701254
6)	700008
6)	701352

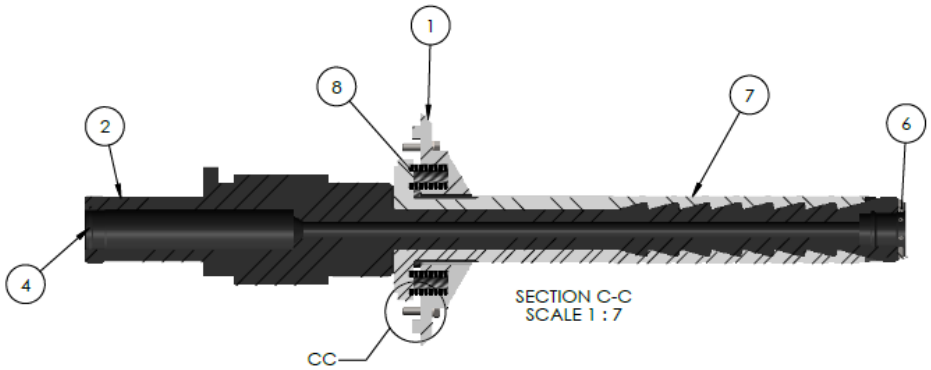

SECTION C-C
SCALE 1 : 7

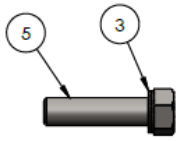

DETAIL CC
SCALE 1 : 2

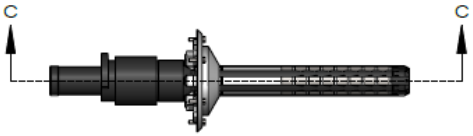

CRITICAL COMPONENT: No

UNLESS OTHERWISE SPECIFIED

DO NOT SCALE FOR DIMENSIONS. ALL DIMENSIONS ARE IN INCHES. REMOVE ALL BURRS. RADIUS ALL CORNERS .005/.047. BREAK ALL SHARP EDGES .005/.020 X 45° OR .005/.020 R DRILLED HOLES SHOULD BE ON THE PLUS SIDE OF THE TOLERANCE

DECIMAL TOLERANCES		SURFACE FINISH	CONCENTRICITY
.X = ±.032	FRACTION ± 1/32	MACHINED 250RMS	MACHINED SURFACES OD - ID .010 TIR
.XX = ±.015	ANGULAR ± 0.50°	STRAIGHT THDS. 175RMS	ID - ID .010 TIR
.XXX = ±.005	PERPEND. ± 0.25°	TAPERED THDS. 125RMS	OD - OD .010 TIR
			AS R./MACH. .025 TIR

MATERIAL

PROCESS SPECS.
1: -
2:
3:
4:

INTERPRET DRAWING PER ASME Y14.5-2009
MATERIAL AND PROCESS SPECIFICATIONS NUMBERS ON THIS DRAWING ARE TO ALWAYS REFERENCE THE LATEST APPROVED REVISION.

©2018 BY DRAWWORKS, L.P. - BOLING DEVELOPMENT GENERAL PARTNER
THIS DOCUMENT IS CONFIDENTIAL AND IS THE PROPERTY OF DRAWWORKS, LP. (DW). IT MAY NOT BE COPIED OR REPRODUCED IN WHOLE OR IN PART IN ANY WAY WITHOUT THE EXPRESS WRITTEN CONSENT OF DW. THIS DOCUMENT ALSO IS AN UNPUBLISHED WORK OF DW. DW OWNS ALL RIGHTS TO THIS WORK AND INTENDS TO MAINTAIN THIS WORK CONFIDENTIAL AND AS A TRADE SECRET. DW MAY ALSO SEEK TO PROTECT THIS WORK AS AN UNPUBLISHED COPYRIGHT. THOSE HAVING ACCESS TO THE WORK MAY NOT COPY, USE, OR DISCLOSE THE INFORMATION IN THIS WORK UNLESS EXPRESSLY AUTHORIZED BY DW TO DO SO.

DWN.	JL	DATE	8/31/2018
APPD.	TF	DATE	9/25/2018
REV. DWN.		DATE	
REV. APPD.		DATE	

Project: DW0013

Description: Internal Gripping Assembly

Size: 4-1/2" 20"
225 Ton 5-1/2" 15.5-26.8 #

DFT SCALE 1:16 WEIGHT(LBS)

Part NO. 605730 REV. - SHEET 4 of 13

C:\dw_vault\dw jobs\handling tools\dw0013\cad files\

Printed copy is **UNCONTROLLED**

IF IN DOUBT...PLEASE ASK!

ITEM NO.	PART NUMBER	DESCRIPTION	Size	Toolbox Size	5.5" 15.5-23#/QTY.
1	605573	Bump Plate	5-1/2" 15.5-23#		1
2	606108	Dovetail Mandrel	5-1/2" 15.5-23# 255 Ton		1
3	700500	Lock Washer Internal Teeth			6
4	700802	PolyPak		3.00ODx2.500ID	1
5	700008	Safety Bolt		1/2-13 x 2	6
6	701352	Set Screw		3/8-16 x 3/4	6
7	605084	Slip	5-1/2" 15.5-26.8#		6
8	701254	Spring			6

Redress Kit
Part # 606201
Contains
QTY Part #
1) 700802
6) 700500

Overhaul Kit
Part # 606205
Contains
QTY Part #
1) 606201
6) 701254
6) 700008
6) 701352

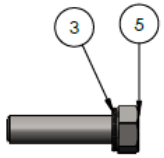

DETAIL DD
SCALE 1 : 2

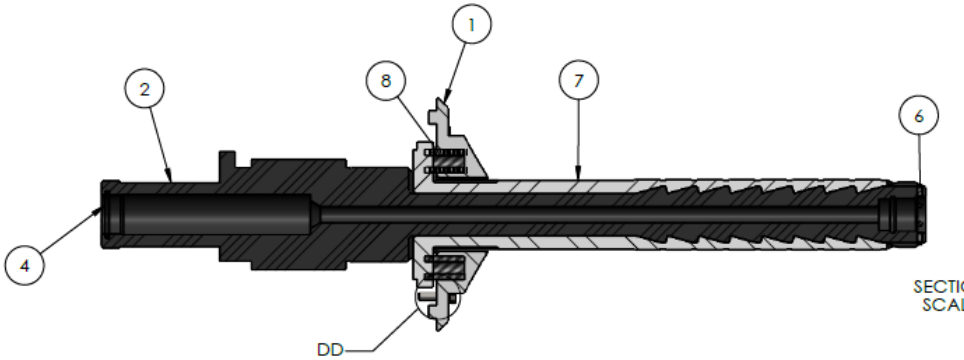

SECTION D-D
SCALE 1 : 7

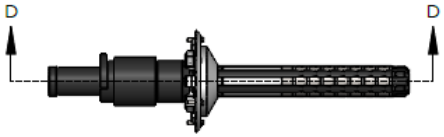

CRITICAL COMPONENT: No

UNLESS OTHERWISE SPECIFIED

DO NOT SCALE FOR DIMENSIONS. ALL DIMENSIONS ARE IN INCHES. REMOVE ALL BURRS. RADIUS ALL CORNERS .025/.047. BREAK ALL SHARP EDGES .005/.020 X 45° OR .005/.020 R DRILLED HOLES SHOULD BE ON THE PLUS SIDE OF THE TOLERANCE

DECIMAL TOLERANCES		SURFACE FINISH		CONCENTRICITY	
.X = ±.032	FRACTION ± 1/32	MACHINED	250RMS	MACHINED SURFACES OD - ID	.010 TIR
.XX = ±.015	ANGULAR ± 0.50°	STRAIGHT THDS.	175RMS	ID - ID	.010 TIR
.XXX = ±.005	PERPEND. ± 0.25°	TAPERED THDS.	125RMS	OD - OD	.010 TIR
				AS R /MACH.	.005 TIR

MATERIAL

PROCESS SPECS.
1: -
2:
3:
4:

INTERPRET DRAWING PER ASME Y14.5-2009
MATERIAL AND PROCESS SPECIFICATIONS NUMBERS ON THIS DRAWING ARE TO ALWAYS REFERENCE THE LATEST APPROVED REVISION.

©2018 BY DRAWWORKS, L.P. : BOUNG DEVELOPMENT GENERAL PARTNER
THIS DOCUMENT IS CONFIDENTIAL AND IS THE PROPERTY OF DRAWWORKS, L.P. (DW). IT MAY NOT BE COPIED OR REPRODUCED IN WHOLE OR IN PART IN ANY WAY WITHOUT THE EXPRESS WRITTEN CONSENT OF DW. THIS DOCUMENT ALSO IS AN UNPUBLISHED WORK OF DW. DW OWNS ALL RIGHTS TO THIS WORK AND INTENDS TO MAINTAIN THIS WORK CONFIDENTIAL AND AS A TRADE SECRET. DW MAY ALSO SEEK TO PROTECT THIS WORK AS AN UNPUBLISHED COPYRIGHT. THOSE HAVING ACCESS TO THE WORK MAY NOT COPY, USE, OR DISCLOSE THE INFORMATION IN THIS WORK UNLESS EXPRESSLY AUTHORIZED BY DW TO DO SO.

DRAWORKS

DWN.	JL	DATE	8/31/2018
APPD.	TF	DATE	9/25/2018
REV. DWN.		DATE	
REV. APPD.		DATE	

Project: DW0013

Description: Internal Gripping Assembly

Size: 4-1/2" 20"
255 Ton 5-1/2" 15.5-23#

DFT SCALE 1:16 WEIGHT(LBS)

Part NO. 605730 | REV. - | SHEET 5 of 13

C:\dw_vault\dw jobs\handling tools\dw0013\cad files\

Printed copy is **UNCONTROLLED**

IF IN DOUBT...PLEASE ASK!

ITEM NO.	PART NUMBER	DESCRIPTION	Size	Toolbox Size	5.5" 20-23#/QTY.
1	605573	Bump Plate	5-1/2" 15.5-23#		1
2	606109	Dovetail Mandrel	5-1/2" 20-23# 300 Ton		1
3	700500	Lock Washer Internal Teeth			6
4	700802	PolyPak		3.00ODx2.500ID	1
5	700008	Safety Bolt		1/2-13 x 2	6
6	701352	Set Screw		3/8-16 x 3/4	6
7	605412	Slip	5-1/2" 20-23#		6
8	701254	Spring			6

Redress Kit
Part # 606201
Contains

QTY	Part #
1)	700802
6)	700500

Overhaul Kit
Part # 606205
Contains

QTY	Part #
1)	606201
6)	701254
6)	700008
6)	701352

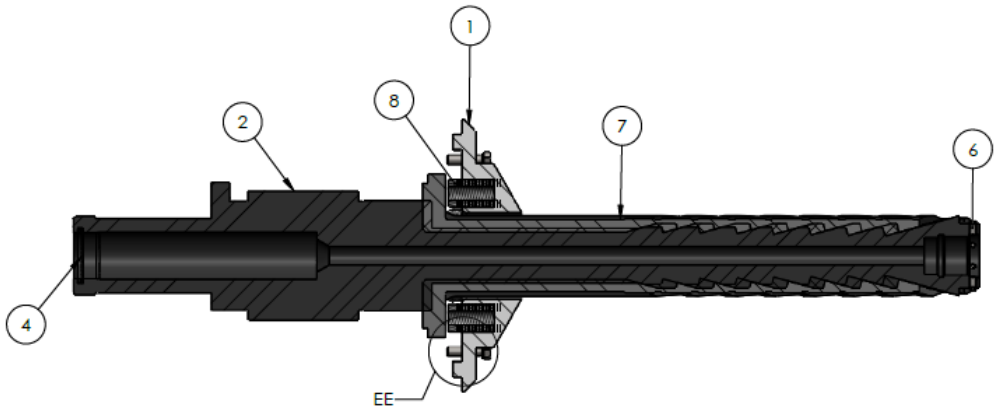

SECTION E-E
SCALE 1 : 6

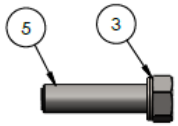

DETAIL EE
SCALE 1 : 2

CRITICAL COMPONENT: No

UNLESS OTHERWISE SPECIFIED

DO NOT SCALE FOR DIMENSIONS. ALL DIMENSIONS ARE IN INCHES. REMOVE ALL BURRS. RADIUS ALL CORNERS .025/.047. BREAK ALL SHARP EDGES .005/.020 X 45° OR .005/.020 R DRILLED HOLES SHOULD BE ON THE PLUS SIDE OF THE TOLERANCE

DECIMAL TOLERANCES		SURFACE FINISH	CONCENTRICITY
.X = ±.032	FRACTION ± 1/32	MACHINED 250RMS	MACHINED SURFACES OD - ID .010 TIR
.XX = ±.015	ANGULAR ± 0.50°	STRAIGHT THDS. 175RMS	ID - ID .010 TIR
.XXX = ±.005	PERPEND. ± 0.25°	TAPERED THDS. 125RMS	OD - OD .010 TIR
			AS R /MACH. .025 TIR

MATERIAL

PROCESS SPECS.
1: -
2:
3:
4:

INTERPRET DRAWING PER ASME Y14.5-2009
MATERIAL AND PROCESS SPECIFICATIONS NUMBERS ON THIS DRAWING ARE TO ALWAYS REFERENCE THE LATEST APPROVED REVISION.

©2018 BY DRAWWORKS, L.P. - BOLING DEVELOPMENT GENERAL PARTNER
THIS DOCUMENT IS CONFIDENTIAL AND IS THE PROPERTY OF DRAWWORKS, L.P., (DW). IT MAY NOT BE COPIED OR REPRODUCED IN WHOLE OR IN PART IN ANY WAY WITHOUT THE EXPRESS WRITTEN CONSENT OF DW. THIS DOCUMENT ALSO IS AN UNPUBLISHED WORK OF DW. DW OWNS ALL RIGHTS TO THIS WORK AND INTENDS TO MAINTAIN THIS WORK CONFIDENTIAL AND AS A TRADE SECRET. DW MAY ALSO SEEK TO PROTECT THIS WORK AS AN UNPUBLISHED COPYRIGHT. THOSE HAVING ACCESS TO THE WORK MAY NOT COPY, USE, OR DISCLOSE THE INFORMATION IN THIS WORK UNLESS EXPRESSLY AUTHORIZED BY DW TO DO SO.

DWN.	JL	DATE	8/31/2018
APPD.	TF	DATE	9/25/2018
REV. DWN.		DATE	
REV. APPD.		DATE	

Project: DW0013

Description: Internal Gripping Assembly

Size: 4-1/2" 20"
300 Ton 5-1/2" 20-23#

DFT SCALE 1:16 WEIGHT(LBS)

Part NO. 605730 | REV. - | SHEET 6 of 13

C:\dw_vault\dw jobs\handling tools\dw0013\cad files\

Printed copy is **UNCONTROLLED**

IF IN DOUBT...PLEASE ASK!

ITEM NO.	PART NUMBER	DESCRIPTION	Size	Toolbox Size	6" 20-24.5#/QTY.
1	605533	Bump Plate	6" 20-24.5#		1
2	606110	Dovetail Mandrel	6" 20-24.5# 430 Ton		1
3	700500	Lock Washer Internal Teeth			6
4	700802	PolyPak		3.00ODx2.500ID	1
5	700008	Safety Bolt		1/2-13 x 2	6
6	701352	Set Screw		3/8-16 x 3/4	6
7	605532	Slip	6" 20-24.5#		6
8	701254	Spring			6

Redress Kit
Part # 606201
Contains
QTY Part #
1) 700802
6) 700500

Overhaul Kit
Part # 606205
Contains
QTY Part #
1) 606201
6) 701254
6) 700008
6) 701352

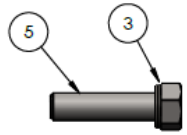

DETAIL FF
SCALE 1 : 2

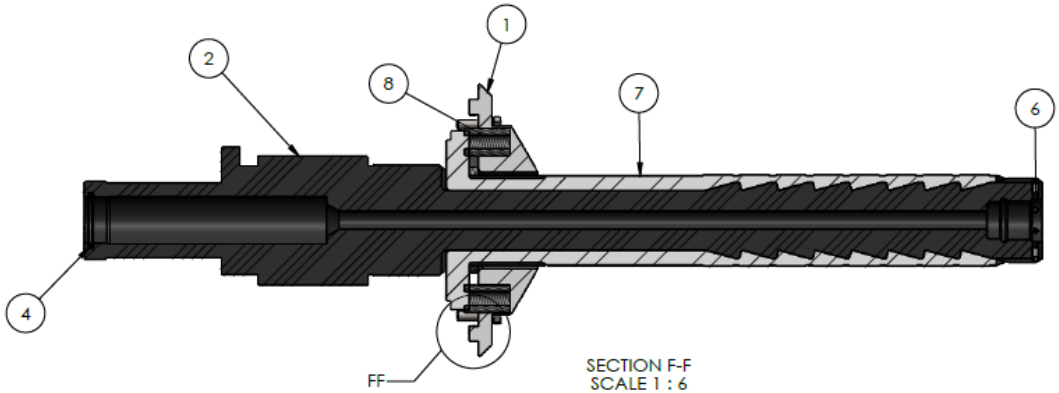

SECTION F-F
SCALE 1 : 6

CRITICAL COMPONENT: No

UNLESS OTHERWISE SPECIFIED

DO NOT SCALE FOR DIMENSIONS. ALL DIMENSIONS ARE IN INCHES. REMOVE ALL BURRS. RADIUS ALL CORNERS .025/.047. BREAK ALL SHARP EDGES .005/.020 X 45° OR .005/.020 R DRILLED HOLES SHOULD BE ON THE PLUS SIDE OF THE TOLERANCE

DECIMAL TOLERANCES		SURFACE FINISH		CONCENTRICITY	
.X = ±.032	FRACTION ± 1/32	MACHINED	250RMS	MACHINED SURFACES OD - ID	.010 TIR
.XX = ±.015	ANGULAR ± 0.50°	STRAIGHT THDS.	175RMS	ID - ID	.010 TIR
.XXX = ±.005	PERPEND. ± 0.25°	TAPERED THDS.	125RMS	OD - OD	.010 TIR
			AS R /MACH.		.025 TIR

MATERIAL

PROCESS SPECS.
1: -
2:
3:
4:

INTERPRET DRAWING PER ASME Y14.5-2009
MATERIAL AND PROCESS SPECIFICATIONS NUMBERS ON THIS DRAWING ARE TO ALWAYS REFERENCE THE LATEST APPROVED REVISION.

©2018 BY DRAWWORKS, L.P. - BOLING DEVELOPMENT GENERAL PARTNER
THIS DOCUMENT IS CONFIDENTIAL AND IS THE PROPERTY OF DRAWWORKS, L.P. (DW). IT MAY NOT BE COPIED OR REPRODUCED IN WHOLE OR IN PART IN ANY WAY WITHOUT THE EXPRESS WRITTEN CONSENT OF DW. THIS DOCUMENT ALSO IS AN UNPUBLISHED WORK OF DW. DW OWNS ALL RIGHTS TO THE WORK AND INTENDS TO MAINTAIN THIS WORK CONFIDENTIAL AND AS A TRADE SECRET. DW MAY ALSO SEEK TO PROTECT THIS WORK AS AN UNPUBLISHED COPYRIGHT. THOSE HAVING ACCESS TO THE WORK MAY NOT COPY, USE, OR DISCLOSE THE INFORMATION IN THIS WORK UNLESS EXPRESSLY AUTHORIZED BY DW TO DO SO.

DWN.	JL	DATE	8/31/2018
APPD.	TF	DATE	9/25/2018
REV. DWN.		DATE	
REV. APPD.		DATE	

Project: DW0013

Description: Internal Gripping Assembly

Size: 4-1/2" 20"
430 Ton 6" 20-24.5 #

DFT SCALE 1:6 WEIGHT(LBS)

Part NO. 605730 REV. - SHEET 7 of 13

C:\dw_vault\dw jobs\handling tools\dw0013\cad files\

Printed copy is **UNCONTROLLED**

IF IN DOUBT...PLEASE ASK!

ITEM NO.	PART NUMBER	DESCRIPTION	Size	Toolbox Size	6.625" 20-36.7#/QTY.
1	605499	Bump Plate	6-5/8" 20-36.7#		1
2	606111	Dovetail Mandrel	6-5/8" 20-36.7#		1
3	700500	Lock Washer Internal Teeth			6
4	700802	PolyPak		3.00ODx2.500ID	1
5	700008	Safety Bolt		1/2-13 x 2	6
6	701352	Set Screw		3/8-16 x 3/4	6
7	605498	Slip	6-5/8" 20-36.7 #		6
8	701254	Spring			6

Redress Kit
Part # 606201
Contains
QTY Part #
1) 700802
6) 700500

Overhaul Kit
Part # 606205
Contains
QTY Part #
1) 606201
6) 701254
6) 700008
6) 701352

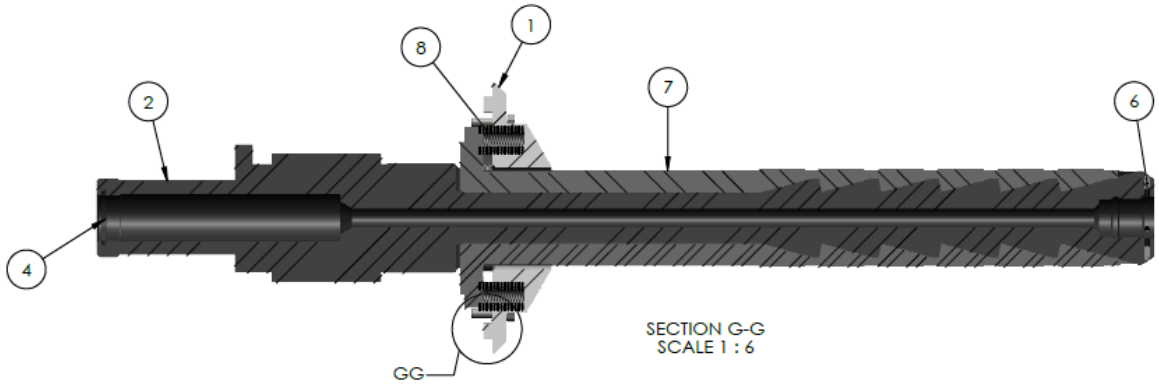

SECTION G-G
SCALE 1 : 6

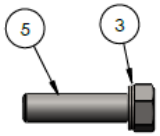

DETAIL GG
SCALE 1 : 2

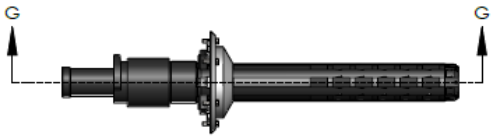

CRITICAL COMPONENT: No

UNLESS OTHERWISE SPECIFIED

DO NOT SCALE FOR DIMENSIONS. ALL DIMENSIONS ARE IN INCHES. REMOVE ALL BURRS. RADIUS ALL CORNERS .005/.047. BREAK ALL SHARP EDGES .005/.020 X 45° OR .005/.020 R DRILLED HOLES SHOULD BE ON THE PLUS SIDE OF THE TOLERANCE

DECIMAL TOLERANCES		SURFACE FINISH	CONCENTRICITY
.X = ±.032	FRACTION ± 1/32	MACHINED 250RMS	MACHINED SURFACES OD - ID .010 TIR
.XX = ±.015	ANGULAR ± 0.50°	STRAIGHT THDS. 175RMS	ID - ID .010 TIR
.XXX = ±.005	PERPEND. ± 0.25°	TAPERED THDS. 125RMS	OD - OD .010 TIR
			AS R./MACH. .025 TIR

MATERIAL

PROCESS SPECS.
1: -
2:
3:
4:

INTERPRET DRAWING PER ASME Y14.5-2009
MATERIAL AND PROCESS SPECIFICATIONS NUMBERS ON THIS DRAWING ARE TO ALWAYS REFERENCE THE LATEST APPROVED REVISION.

©2018 BY DRAWWORKS, LP. : BOLING DEVELOPMENT GENERAL PARTNER
THIS DOCUMENT IS CONFIDENTIAL AND IS THE PROPERTY OF DRAWWORKS, LP. (DW). IT MAY NOT BE COPIED OR REPRODUCED IN WHOLE OR IN PART IN ANY WAY WITHOUT THE EXPRESS WRITTEN CONSENT OF DW. THIS DOCUMENT ALSO IS AN UNPUBLISHED WORK OF DW. DW OWNS ALL RIGHTS TO THIS WORK AND INTENDS TO MAINTAIN THIS WORK CONFIDENTIAL AND AS A TRADE SECRET. DW MAY ALSO SEEK TO PROTECT THIS WORK AS AN UNPUBLISHED COPYRIGHT. THOSE HAVING ACCESS TO THE WORK MAY NOT COPY, USE, OR DISCLOSE THE INFORMATION IN THIS WORK UNLESS EXPRESSLY AUTHORIZED BY DW TO DO SO.

DRAWORKS

DWN.	JL	DATE	8/31/2018
APPD.	TF	DATE	9/25/2018
REV. DWN.		DATE	
REV. APPD.		DATE	

Project: DW0013

Description: Internal Gripping Assembly

Size: 4-1/2" 20"
370 Ton 6-5/8" 20-36.7#

DFT SCALE 1:16 WEIGHT(LBS)

Part NO. 605730 | REV. - | SHEET 8 of 13

C:\dw_vault\dw jobs\handling tools\dw0013\cad files\

Printed copy is **UNCONTROLLED**

IF IN DOUBT...PLEASE ASK!

ITEM NO.	PART NUMBER	DESCRIPTION	Size	Toolbox Size	7" 17-35#/QTY.
1	605330	Bump Plate	7"		1
2	606112	Dovetail Mandrel	7"-20" 450 Ton		1
3	700500	Lock Washer Internal Teeth			6
4	700802	PolyPak		3.00ODx2.500ID	1
5	700008	Safety Bolt		1/2-13 x 2	6
6	701352	Set Screw		3/8-16 x 3/4	6
7	605062	Slip	7" 17-35#		6
8	701254	Spring			6
9	605287	Thread Protector	7" 17-35#		1

Redress Kit
Part # 606202
Contains

QTY	Part #
1)	700802
6)	700500

Overhaul Kit
Part # 606206
Contains

QTY	Part #
1)	606202
6)	701254
6)	700008
6)	701352

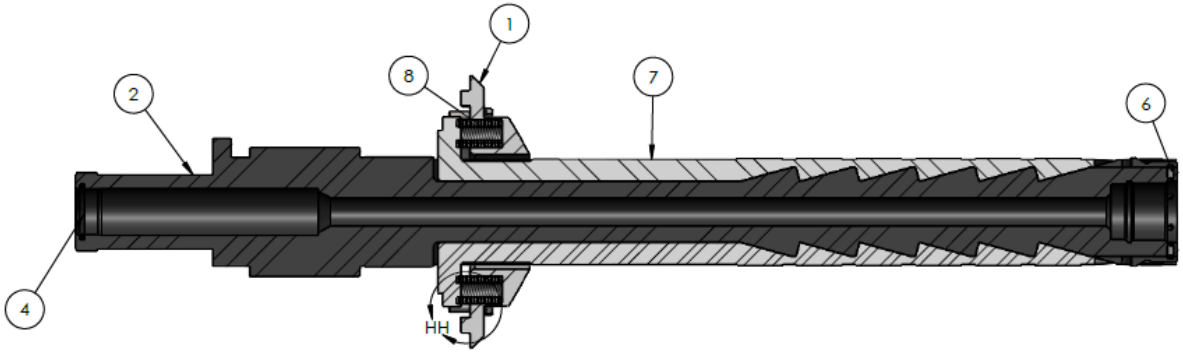

SECTION H-H
SCALE 1 : 6

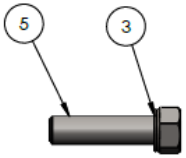

DETAIL HH
SCALE 1 : 2

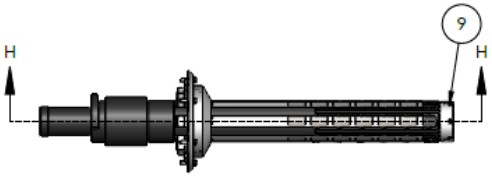

CRITICAL COMPONENT: No

UNLESS OTHERWISE SPECIFIED
DO NOT SCALE FOR DIMENSIONS. ALL DIMENSIONS ARE IN INCHES. REMOVE ALL BURRS. RADIUS ALL CORNERS .025/.047. BREAK ALL SHARP EDGES .005/.020 X 45° OR .005/.020 R DRILLED HOLES SHOULD BE ON THE PLUS SIDE OF THE TOLERANCE

DECIMAL TOLERANCES		SURFACE FINISH		CONCENTRICITY
.X = ±.032	FRACTION ± 1/32	MACHINED	250RMS	MACHINED SURFACES OD - ID .010 TIR
.XX = ±.015	ANGULAR ± 0.50°	STRAIGHT THDS.	175RMS	ID - ID .010 TIR
.XXX = ±.005	PERPEND. ± 0.25°	TAPERED THDS.	125RMS	OD - OD .010 TIR
			AS R /MACH.	.025 TIR

MATERIAL
PROCESS SPECS.
1: -
2:
3:
4:

INTERPRET DRAWING PER ASME Y14.5-2009
MATERIAL AND PROCESS SPECIFICATIONS NUMBERS ON THIS DRAWING ARE TO ALWAYS REFERENCE THE LATEST APPROVED REVISION.
©2018 BY DRAWWORKS, LP - BOLING DEVELOPMENT GENERAL PARTNER
THIS DOCUMENT IS CONFIDENTIAL AND IS THE PROPERTY OF DRAWWORKS, LP. (DW) IT MAY NOT BE COPIED OR REPRODUCED IN WHOLE OR IN PART IN ANY WAY WITHOUT THE EXPRESS WRITTEN CONSENT OF DW. THIS DOCUMENT ALSO IS AN UNPUBLISHED WORK OF DW. DW OWNS ALL RIGHTS TO THE WORK AND INTENDS TO MAINTAIN THIS WORK CONFIDENTIAL AND AS A TRADE SECRET. DW MAY ALSO SEEK TO PROTECT THIS WORK AS AN UNPUBLISHED COPYRIGHT. THOSE HAVING ACCESS TO THE WORK MAY NOT COPY, USE, OR DISCLOSE THE INFORMATION IN THIS WORK UNLESS EXPRESSLY AUTHORIZED BY DW TO DO SO.

DRAWORKS

DWN.	JL	DATE	8/31/2018
APPD.	TF	DATE	9/25/2018
REV. DWN.		DATE	
REV. APPD.		DATE	

Project: DW0013
Description: Internal Gripping Assembly
Size: 4-1/2" 20"
450 Ton 7" 17-35#
DFT SCALE 1:6 WEIGHT(LBS)
Part NO. 605730
REV. -
SHEET 9 of 13

C:\dw_vault\dw jobs\handling tools\dw0013\cad files\

Printed copy is **UNCONTROLLED**

IF IN DOUBT...PLEASE ASK!

ITEM NO.	PART NUMBER	DESCRIPTION	Size	Toolbox Size	7.625" 24-42.8#/QTY.
1	605374	Bump Plate	7-5/8"		1
2	606112	Dovetail Mandrel	7"-20" 450 Ton		1
3	700500	Lock Washer Internal Teeth			6
4	700802	PolyPak		3.00ODx2.500ID	1
5	700008	Safety Bolt		1/2-13 x 2	6
6	701357	Set Screw		3/8-16 x 1 1/2	6
7	605063	Slip	7-5/8" 24-42.8#		6
8	701254	Spring			6
9	605160	Wear Guide	7-5/8" 24-42.8#		6
10	605167	Wear Guide Nut	7-5/8" - 20"		1

Redress Kit
Part # 606202
Contains
QTY Part #
1) 700802
6) 700500

Overhaul Kit
Part # 606206
Contains
QTY Part #
1) 606202
6) 701254
6) 700008
6) 701357

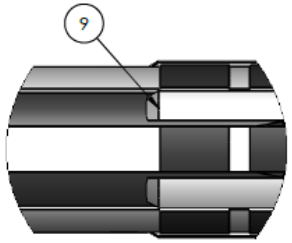

DETAIL III
SCALE 1 : 4

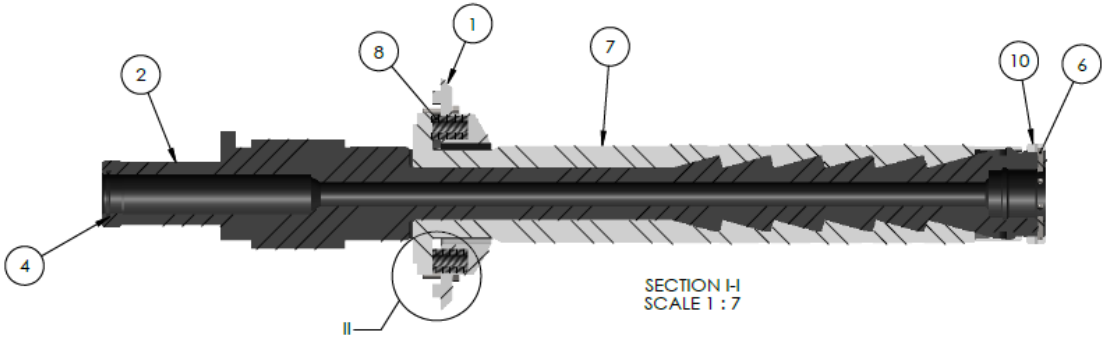

SECTION I-I
SCALE 1 : 7

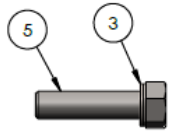

DETAIL II
SCALE 1 : 2

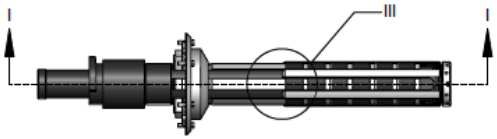

CRITICAL COMPONENT: No

UNLESS OTHERWISE SPECIFIED

DO NOT SCALE FOR DIMENSIONS. ALL DIMENSIONS ARE IN INCHES. REMOVE ALL BURRS. RADIUS ALL CORNERS .005/.047. BREAK ALL SHARP EDGES .005/.030 X 45° OR .005/.030 R DRILLED HOLES SHOULD BE ON THE PLUS SIDE OF THE TOLERANCE

DECIMAL TOLERANCES		SURFACE FINISH		CONCENTRICITY	
.X = ±.032	FRACTION ± 1/32	MACHINED	250RMS	MACHINED SURFACES OD - ID	.010 TIR
.XX = ±.015	ANGULAR ± 0.50°	STRAIGHT THDS.	175RMS	ID - ID	.010 TIR
.XXX = ±.005	PERPEND. ± 0.25°	TAPERED THDS.	125RMS	OD - OD	.010 TIR
				AS R./MACH.	.025 TIR

MATERIAL

PROCESS SPECS.
1: -
2:
3:
4:

INTERPRET DRAWING PER ASME Y14.5-2009

MATERIAL AND PROCESS SPECIFICATIONS NUMBERS ON THIS DRAWING ARE TO ALWAYS REFERENCE THE LATEST APPROVED REVISION.

©2018 BY DRAWWORKS, L.P. - BOLING DEVELOPMENT GENERAL PARTNER
THIS DOCUMENT IS CONFIDENTIAL AND IS THE PROPERTY OF DRAWWORKS, L.P., (DW). IT MAY NOT BE COPIED OR REPRODUCED IN WHOLE OR IN PART IN ANY WAY WITHOUT THE EXPRESS WRITTEN CONSENT OF DW. THIS DOCUMENT ALSO IS AN UNPUBLISHED WORK OF DW. DW OWNS ALL RIGHTS TO THIS WORK AND INTENDS TO MAINTAIN THIS WORK CONFIDENTIAL AND AS A TRADE SECRET. DW MAY ALSO SEEK TO PROTECT THIS WORK AS AN UNPUBLISHED COPYRIGHT. THOSE HAVING ACCESS TO THE WORK MAY NOT COPY, USE, OR DISCLOSE THE INFORMATION IN THIS WORK UNLESS EXPRESSLY AUTHORIZED BY DW TO DO SO.

DWN.	JL	DATE	8/31/2018
APPD.	TF	DATE	9/25/2018
REV. DWN.		DATE	
REV. APPD.		DATE	

Project: DW0013

Description: Internal Gripping Assembly

Size: 4-1/2" 20"
450 Ton 7-5/8"

DFT SCALE 1:16 WEIGHT(LBS)

Part NO. 605730 REV. - SHEET 10 of 13

C:\dw_vault\dw jobs\handling tools\dw0013\cad files\

Printed copy is **UNCONTROLLED**

IF IN DOUBT...PLEASE ASK!

ITEM NO.	PART NUMBER	DESCRIPTION	Size	Toolbox Size	8.625" 24-44#/QTY.
1	605331	Bump Plate	8-5/8" 13-5/8"		1
2	606112	Dovetail Mandrel	7"-20" 450 Ton		1
3	700500	Lock Washer Internal Teeth			6
4	700802	PolyPak		3.00ODx2.500ID	1
5	700008	Safety Bolt		1/2-13 x 2	6
6	701357	Set Screw		3/8-16 x 1 1/2	6
7	605133	Slip	8-5/8" 24-44#		6
8	701254	Spring			6
9	605161	Wear Guide	8-5/8" 24-44#		6
10	605167	Wear Guide Nut	7-5/8" - 20"		1

Redress Kit
Part # 606202
Contains

QTY	Part #
1)	700802
6)	700500

Overhaul Kit
Part # 606206
Contains

QTY	Part #
1)	606202
6)	701254
6)	700008
6)	701357

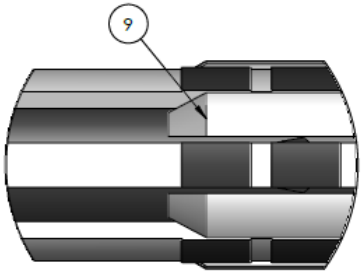

DETAIL JJJ
SCALE 1 : 4

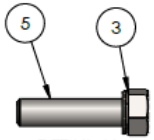

DETAIL JJ
SCALE 1 : 2

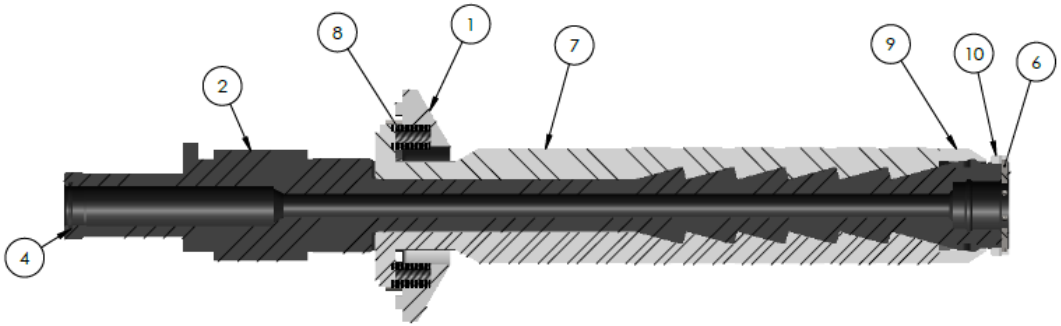

SECTION J-J
SCALE 1 : 7

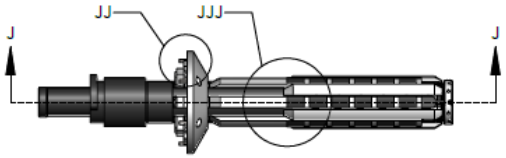

CRITICAL COMPONENT: No

UNLESS OTHERWISE SPECIFIED

DO NOT SCALE FOR DIMENSIONS. ALL DIMENSIONS ARE IN INCHES. REMOVE ALL BURRS. RADIUS ALL CORNERS .025/.047. BREAK ALL SHARP EDGES .005/.020 X 45° OR .005/.020 R DRILLED HOLES SHOULD BE ON THE PLUS SIDE OF THE TOLERANCE

DECIMAL TOLERANCES		SURFACE FINISH		CONCENTRICITY	
.X = ±.032	FRACTION ± 1/32	MACHINED	250RMS	MACHINED SURFACES OD - ID	.010 TIR
.XX = ±.015	ANGULAR ± 0.50°	STRAIGHT THDS.	175RMS	ID - ID	.010 TIR
.XXX = ±.005	PERPEND. ± 0.25°	TAPERED THDS.	125RMS	OD - OD	.010 TIR
				AS R /MACH.	.025 TIR

MATERIAL

PROCESS SPECS.
1: -
2:
3:
4:

INTERPRET DRAWING PER ASME Y14.5-2009
MATERIAL AND PROCESS SPECIFICATIONS NUMBERS ON THIS DRAWING ARE TO ALWAYS REFERENCE THE LATEST APPROVED REVISION.

©2018 BY DRAWWORKS, L.P. : BOUNG DEVELOPMENT GENERAL PARTNER
THIS DOCUMENT IS CONFIDENTIAL AND IS THE PROPERTY OF DRAWWORKS, L.P. (DW). IT MAY NOT BE COPIED OR REPRODUCED IN WHOLE OR IN PART IN ANY WAY WITHOUT THE EXPRESS WRITTEN CONSENT OF DW. THIS DOCUMENT ALSO IS AN UNPUBLISHED WORK OF DW. DW OWNS ALL RIGHTS TO THIS WORK AND INTENDS TO MAINTAIN THIS WORK CONFIDENTIAL AND AS A TRADE SECRET. DW MAY ALSO SEEK TO PROTECT THIS WORK AS AN UNPUBLISHED COPYRIGHT. THOSE HAVING ACCESS TO THE WORK MAY NOT COPY, USE, OR DISCLOSE THE INFORMATION IN THIS WORK UNLESS EXPRESSLY AUTHORIZED BY DW TO DO SO.

DWN.	JL	DATE	8/31/2018
APPD.	TF	DATE	9/25/2018
REV. DWN.		DATE	
REV. APPD.		DATE	

Project: DW0013

Description: Internal Gripping Assembly

Size: 4-1/2" 20"
450 Ton 8-5/8"

DFT SCALE 1:16 WEIGHT(LBS)

Part NO. 605730 | REV. - | SHEET 11 of 13

C:\dw_vault\dw jobs\handling tools\dw0013\cad files\

Printed copy is **UNCONTROLLED**

IF IN DOUBT...PLEASE ASK!

ITEM NO.	PART NUMBER	DESCRIPTION	Size	Toolbox Size	9.625" 36-59.4#/QTY.
1	605741	Base Slip	9-5/8"-20" 450 Ton		6
2	605331	Bump Plate	8-5/8" 13-5/8"		1
3	606112	Dovetail Mandrel	7"-20" 450 Ton		1
4	605067	Insert	9-5/8" 36-59.4#		6
5	700500	Lock Washer Internal Teeth			30
6	700802	PolyPak		3.00ODx2.500ID	1
7	700008	Safety Bolt		1/2-13 x 2	6
8	701357	Set Screw		3/8-16 x 1 1/2	6
9	701254	Spring			6
10	700111	Torx Bolt		1/2-13 x 7/8	24
11	605162	Wear Guide	9-5/8" 36-59.4#		1
12	605167	Wear Guide Nut	7-5/8" - 20"		1

Other Size Configurations

ITEM NO.	PART NUMBER	DESCRIPTION	Size	10.75" 40.5-60.7#/QTY.
4	605068	Insert	10-3/4" 40.5-60.7#	6
11	605163	Wear Guide	10-3/4" 40.5-60.7#	1
ITEM NO.	PART NUMBER	DESCRIPTION	Size	11.75" 47-71#/QTY.
4	605069	Insert	11-3/4" 47-71#	6
11	605164	Wear Guide	11-3/4" 47-71#	1
ITEM NO.	PART NUMBER	DESCRIPTION	Size	13.375 54.4-85# 13.625 88.2#/QTY.
4	605070	Insert	13-3/8" 54.4-85#	6
11	605165	Wear Guide	13-3/8" 54.4-85 #	1

Redress Kit
Part # 606203
contains
QTY Part #
1) 700802
30) 700500

Overhaul kit
Part # 606207
Contains
QTY Part #
1) 606203
6) 701254
6) 700008
24) 700009
6) 701357

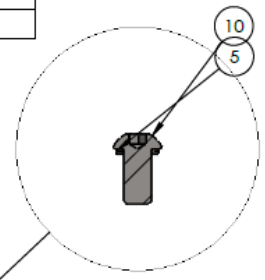

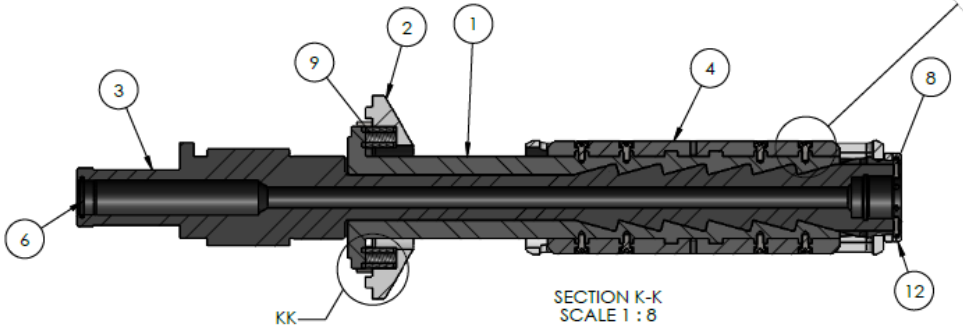

SECTION K-K
SCALE 1 : 8

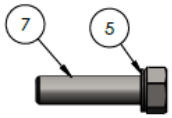

DETAIL KK
SCALE 1 : 2

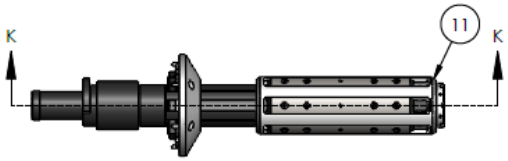

CRITICAL COMPONENT: No

UNLESS OTHERWISE SPECIFIED
DO NOT SCALE FOR DIMENSIONS. ALL DIMENSIONS ARE IN INCHES. REMOVE ALL BURRS. RADIUS ALL CORNERS .025/.047. BREAK ALL SHARP EDGES .005/.020 X 45° OR .005/.020 R DRILLED HOLES SHOULD BE ON THE PLUS SIDE OF THE TOLERANCE

DECIMAL TOLERANCES		SURFACE FINISH	CONCENTRICITY
.X = ±.032	FRACTION ± 1/32	MACHINED 250RMS	MACHINED SURFACES OD - ID .010 TIR
.XX = ±.015	ANGULAR ± 0.50°	STRAIGHT THDS. 175RMS	ID - ID .010 TIR
.XXX = ±.005	PERPEND. ± 0.25°	TAPERED THDS. 125RMS	OD - OD .010 TIR
		AS R./MACH. .025 TIR	

MATERIAL
PROCESS SPECS.
1: -
2:
3:
4:

INTERPRET DRAWING PER ASME Y14.5-2009
MATERIAL AND PROCESS SPECIFICATIONS NUMBERS ON THIS DRAWING ARE TO ALWAYS REFERENCE THE LATEST APPROVED REVISION.
©2018 BY DRAWWORKS, LP - SOLING DEVELOPMED IT GENERAL PARTNER
THIS DOCUMENT IS CONFIDENTIAL AND IS THE PROPERTY OF DRAWWORKS, LP. (DW) IT MAY NOT BE COPIED OR REPRODUCED IN WHOLE OR IN PART IN ANY WAY WITHOUT THE EXPRESS WRITTEN CONSENT OF DW. THE DOCUMENT ALSO IS AN UNPUBLISHED WORK OF DW. DW OWNS ALL RIGHTS TO THE WORK AND INTENDS TO MAINTAIN THIS WORK CONFIDENTIAL AND AS A TRADE SECRET. DW MAY ALSO SEEK TO PROTECT THIS WORK AS AN UNPUBLISHED COPYRIGHT. THOSE HAVING ACCESS TO THE WORK MAY NOT COPY, USE, OR DISCLOSE THE INFORMATION IN THIS WORK UNLESS EXPRESSLY AUTHORIZED BY DW TO DO SO.

DWN.	JL	DATE	8/31/2018
APPD.	TF	DATE	9/25/2018
REV. DWN.		DATE	
REV. APPD.		DATE	

Project: DW0013
Description: Internal Gripping Assembly
Size: 4-1/2" 20"
450 Ton 9-5/8 - 13-3/8
DFT SCALE 1:16 WEIGHT(LBS)
Part NO. 605730
REV. -
SHEET 12 of 13

C:\dw_vault\dw jobs\handling tools\dw0013\cad files\

Printed copy is **UNCONTROLLED**

IF IN DOUBT...PLEASE ASK!

ITEM NO.	PART NUMBER	DESCRIPTION	Size	Toolbox Size	16" 65-109#/QTY.
1	605741	Base Slip	9-5/8"-20" 450 Ton		6
2	605361	Bump Plate	16"-20"		1
3	606112	Dovetail Mandrel	7"-20" 450 Ton		1
4	605529	Insert	16" 65-109#		6
5	700500	Lock Washer Internal Teeth			30
6	700802	PolyPak		3.00ODx2.500ID	1
7	700008	Safety Bolt		1/2-13 x 2	6
8	701357	Set Screw		3/8-16 x 1 1/2	6
9	701254	Spring			6
10	700111	Torx Bolt		1/2-13 x 7/8	24
11	605530	Wear Guide	16" 65-109#		1
12	605167	Wear Guide Nut	7-5/8" - 20"		1

Other Size Configurations

ITEM NO.	PART NUMBER	DESCRIPTION	Size	16.75" 65-109#/QTY.
4	605422	Insert	16-3/4" 78#	6
11	605421	Wear Guide	16-3/4" 78#	1
ITEM NO.	PART NUMBER	DESCRIPTION	Size	18.625 87.5-117#/QTY.
4	605527	Insert	18-5/8" 87.5-117#	6
11	605528	Wear Guide	18-5/8" 87.5-117#	1
ITEM NO.	PART NUMBER	DESCRIPTION	Size	20" 94-133#/QTY.
4	605373	Insert	20" 94-133#	6
11	605370	Wear Guide	20" 94-133#	1

Redress Kit
Part # 606203
contains
QTY Part #
1) 700802
30) 700500

Overhaul kit
Part # 606207
Contains
QTY Part #
1) 606203
6) 701254
6) 700008
24) 700009
6) 701357

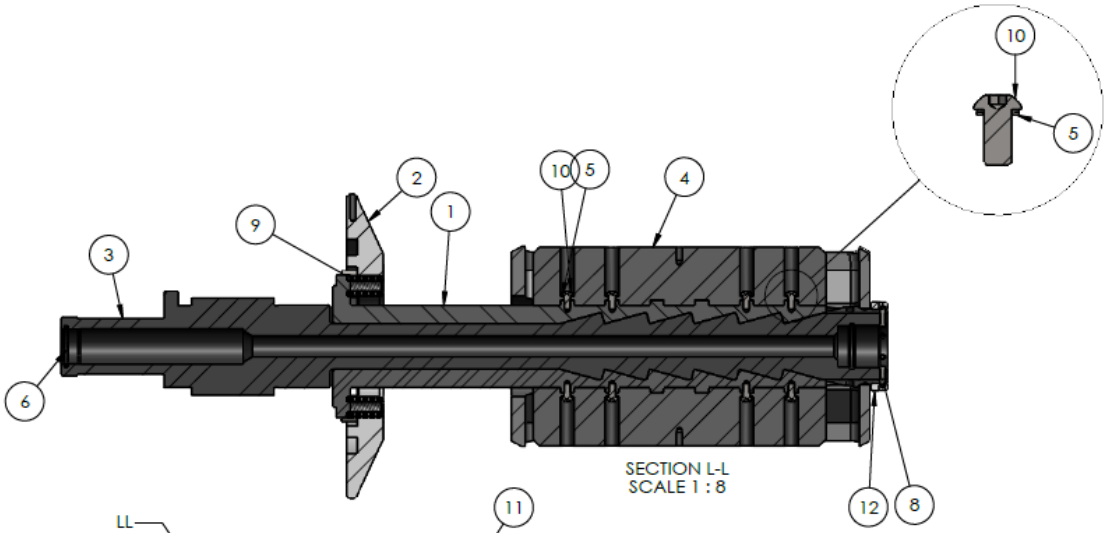

SECTION L-L
SCALE 1 : 8

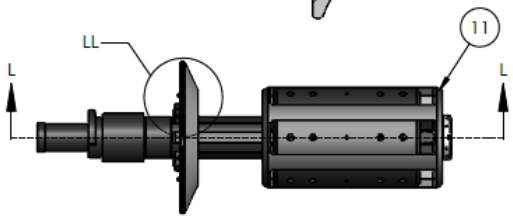

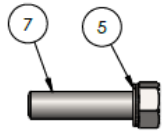

DETAIL LL
SCALE 1 : 2

CRITICAL COMPONENT: No

UNLESS OTHERWISE SPECIFIED
DO NOT SCALE FOR DIMENSIONS. ALL DIMENSIONS ARE IN INCHES. REMOVE ALL BURRS. RADIUS ALL CORNERS .005/.047. BREAK ALL SHARP EDGES .005/.020 X 45° OR .005/.020 R DRILLED HOLES SHOULD BE ON THE PLUS SIDE OF THE TOLERANCE

DECIMAL TOLERANCES		SURFACE FINISH		CONCENTRICITY	
.X = ±.032	FRACTION ± 1/32	MACHINED 250RMS	MACHINED SURFACES OD - ID	.010 TIR	
.XX = ±.015	ANGULAR ± 0.50°	STRAIGHT THDS. 175RMS	ID - ID	.010 TIR	
.XXX = ±.005	PERPEND. ± 0.25°	TAPERED THDS. 125RMS	OD - OD	.010 TIR	
			AS R./MACH.	.025 TIR	

MATERIAL
PROCESS SPECS.
1: -
2:
3:
4:

INTERPRET DRAWING PER ASME Y14.5-2009
MATERIAL AND PROCESS SPECIFICATIONS NUMBERS ON THIS DRAWING ARE TO ALWAYS REFERENCE THE LATEST APPROVED REVISION.
©2018 BY DRAWWORKS, L.P. - BOLING DEVELOPMENT GENERAL PARTNER
THIS DOCUMENT IS CONFIDENTIAL AND IS THE PROPERTY OF DRAWWORKS, LP. (DW). IT MAY NOT BE COPIED OR REPRODUCED IN WHOLE OR IN PART IN ANY WAY WITHOUT THE EXPRESS WRITTEN CONSENT OF DW. THIS DOCUMENT ALSO IS AN UNPUBLISHED WORK OF DW. DW OWNS ALL RIGHTS TO THIS WORK AND INTENDS TO MAINTAIN THIS WORK CONFIDENTIAL AND AS A TRADE SECRET. DW MAY ALSO SEEK TO PROTECT THIS WORK AS AN UNPUBLISHED COPYRIGHT. THOSE HAVING ACCESS TO THE WORK MAY NOT COPY, USE, OR DISCLOSE THE INFORMATION IN THIS WORK UNLESS EXPRESSLY AUTHORIZED BY DW TO DO SO.

DWN.	JL	DATE	8/31/2018
APPD.	TF	DATE	9/25/2018
REV. DWN.		DATE	
REV. APPD.		DATE	

Project: DW0013
Description: Internal Gripping Assembly
Size: 4-1/2" 20"
450 Ton 16"-20"
DFT SCALE 1:16 WEIGHT(LBS)
Part NO. 605730
REV. -
SHEET 13 of 13

C:\dw_vault\dw jobs\handling tools\dw0013\cad files\

Printed copy is **UNCONTROLLED**

10.3 Internal Gripping Assembly, 7” – 26”

IF IN DOUBT...PLEASE ASK!

Tubular Size	Weight Range	API 8C Hoist Capacity (Tons)	Torque Capacity (Locked ft-lb)	Torque Capacity (Unlocked ft-lb)	Minimum ID (in.)	Flow Rate (brl/min)	OAL (in.)	OAL w/ Autovalve (in.)	Aprox Weight (lbs.)
7"	17-35#	400	60,000	20,000	1.5	12	122	137	2950
7-5/8"	39-55.3#	500	65,000	25,000	1.5	12	122	137	3000
9-5/8"	36 -59.4 #	1000	100,000	75,000	2.25	20	130	153	3350
10-3/4"	40.5 - 60.7#	1000	100,000	75,000	2.25	20	130	153	3580
11-3/4"	47 - 71#	1000	100,000	75,000	2.25	20	130	153	3600
13-3/8"	54.4 - 85#	1000	100,000	75,000	2.25	20	130	153	4000
13-5/8"	88.2#	1000	100,000	75,000	2.25	20	130	153	4000
16"	65 -109#	1000	100,000	75,000	2.25	20	135	162	4400
16-3/4"	65 - 109#	1000	100,000	75,000	2.25	20	135	162	4500
18-5/8"	87.5 - 136#	1000	100,000	75,000	2.25	20	135	162	5050
20"	94 - 133#	1000	100,000	75,000	2.25	20	135	162	5300
20"	163-187#	1000	100,000	75,000	2.25	20	135	162	5350
22"	170-224#	1000	100,000	75,000	2.25	20	138	N/A	5850
24"	171-216#	1000	100,000	75,000	2.25	20	138	N/A	6500
26"	202-275#	1000	100,000	75,000	2.25	20	138	N/A	7100

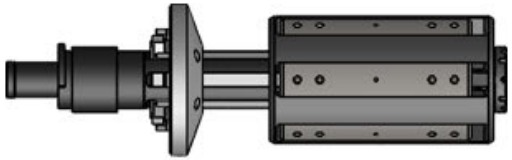

1000 Ton 20" 94-133# Display

CRITICAL COMPONENT:

DO NOT SCALE FOR DIMENSIONS. ALL DIMENSIONS ARE IN INCHES. REMOVE ALL BURRS. RADIUS ALL CORNERS .005/.010" BREAK ALL SHARP EDGES .005/.030 X 45° OR .005/.030 R DRILLED HOLES SHOULD BE ON THE PLUS SIDE OF THE TOLERANCE

DECIMAL TOLERANCES: .X = ±.033; .XX = ±.015; .XXX = ±.005 PERPEND. ± 0.25°; FRACTION ± 1/32; ANGULAR ± 0.50°

SURFACE FINISH: MACHINED 250RMS; STRAIGHT THDS. 175RMS; TAPERED THDS. 125RMS; AS R/MACH. 125RMS

CONCENTRICITY: MACHINED SURFACES OD - ID .010 TIR; ID - ID .010 TIR; OD - OD .010 TIR

FIXTURE NO.: 1: 2: 3: 4:

INTERPRET DRAWING PER ASME Y14.5-2009

MATERIAL AND PROCESS SPECIFICATIONS NUMBERS ON THIS DRAWING ARE TO ALWAYS REFERENCE THE LATEST APPROVED REVISION.

© 2014 DRAWORKS, L.P. & DRAWORKS EQUIPMENT, INC. DO NOT COPY OR REPRODUCE IN WHOLE OR IN PART IN ANY WAY WITHOUT THE EXPRESS WRITTEN CONSENT OF DW. THIS DOCUMENT AND ANY UNPUBLISHED WORK OF DW, DW OWNS ALL RIGHTS TO THIS WORK AND INTENDS TO MAINTAIN THIS WORK CONFIDENTIAL AND AS A TRADE SECRET. DW MAY ALSO SEEK TO PROTECT THIS WORK IN ANY OTHER APPROPRIATE WAY. THIS WORK MAY NOT COPY, USE OR DISCLOSE THE INFORMATION THIS WORK UNLESS EXPRESSLY AUTHORIZED BY DW TO DO SO.

DRAWORKS

DWN. JL	DATE	
APPD. TF	DATE 10/08/2018	
REV. DWN. JL	DATE 10/16/2018	
REV. APPD. RU	DATE 10/18/2018	

Project: DW0004

Description: Internal Grip Assembly

Size: 7"-26"

DRT/SCALE: 1:10 WEIGHT(LBS): 1351.438

Part NO.: 606289 REV.: A SHEET 1 of 7

C:\DW_Vault\DW Jobs\Handling Tools\DW0004\CAD Files\

Printed copy is

IF IN DOUBT...PLEASE ASK!

ITEM NO.	PART NUMBER	DESCRIPTION	Size	Toolbox Size	7 17-35#/QTY.
1	605830	Bump Plate	7" 17-35#		1
2	606115	Dovetail Mandrel	7" 17-35# 400 Ton		1
3	700503	Lock Washer Internal Tooth		3/4	6
4	700804	PolyPak		3.75ODx3.250ID	1
5	700094	Safety Bolt		3/4-10 x 2 3/4	6
6	700016	Set Screw		3/8-16 x 1	6
7	605829	Slip	7" 17-35#		6
8	701255	Spring			6

ITEM NO.	PART NUMBER	DESCRIPTION	Size	606313 Redress Kit 606314 Overhaul/QTY.
50	606313	Redress Kit	DWCRT1K	1
51	606314	Overhaul Kit	7"-7-5/8"	1

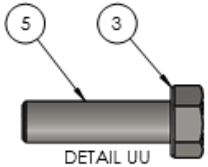

DETAIL UU
SCALE 1 : 2

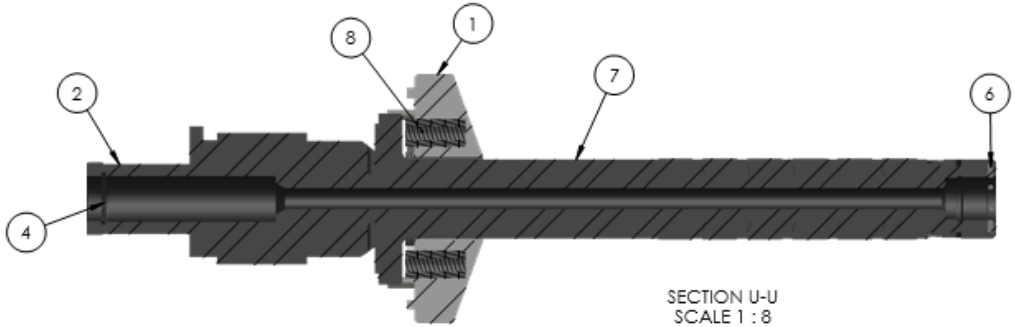

SECTION U-U
SCALE 1 : 8

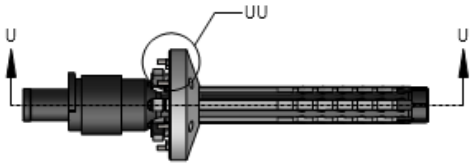

CRITICAL COMPONENT:

DO NOT SCALE FOR DIMENSIONS. ALL DIMENSIONS ARE IN INCHES. REMOVE ALL BURRS. RADIUS ALL CORNERS .005/.015. BREAK ALL SHARP EDGES .005/.030 X 45° OR .005/.030 R. DRILLED HOLES SHOULD BE ON THE PLUS SIDE OF THE TOLERANCE

DECIMAL TOLERANCES		SURFACE FINISH	CONCENTRICITY
.X = ±.032	FRACTION ± 1/32	MACHINED 250RMS	MACHINED SURFACES OD - ID .010 TIR
.XX = ±.015	ANGULAR ± 0.50°	STRAIGHT THDS. 175RMS	ID - ID .010 TIR
.XXX = ±.005	PERPEND. ± 0.25°	TAPERED THDS. 125RMS	OD - OD .010 TIR
			AS R /MACH. .005 TIR

FINISH SPECS.
1:
2:
3:
4:

INTERPRET DRAWING PER ASME Y14.5-2009
MATERIAL AND PROCESS SPECIFICATIONS NUMBERS ON THIS DRAWING ARE TO ALWAYS REFERENCE THE LATEST APPROVED REVISION.

(C) 2011 DRAWORKS, L.L.C. - SOLUTIONS DEVELOPMENT GENERAL PARTNER
THIS DOCUMENT IS CONFIDENTIAL AND MAY NOT BE TRANSFERRED, DISCLOSED, PRINTED, NOR BE COPIED OR REPRODUCED IN WHOLE OR IN PART IN ANY WAY WITHOUT THE EXPRESS WRITTEN CONSENT OF DW. THIS DOCUMENT ALSO IS AN UNPUBLISHED WORK OF DW. DW GIVING ALL RIGHTS TO THE WORK AND INTENDS TO MAINTAIN THE WORK CONFIDENTIAL AND AS A TRADE SECRET. DW MAY ALSO SEEK TO PROTECT THE WORK AS AN UNPUBLISHED COPYRIGHT. THOSE HAVING ACCESS TO THE WORK MAY NOT COPY, USE, OR DISCLOSE THE INFORMATION IN THE WORK UNLESS EXPRESSLY AUTHORIZED BY DW TO DO SO.

DRW.	JL	DATE
APPD.	TF	DATE 10/08/2018
REV. DWN.	JL	DATE 10/16/2018
REV. APPD.	RU	DATE 10/18/2018

Project: DW0004
Description: Internal Grip Assembly 7" 7"-26"
Size
DIT SCALE 1:1 WEIGHT(LBS) 1351.438
Part NO. 606289
REV. A
SHEET 2 of 7

C:\DW_Vault\DW Jobs\Handling Tools\DW0004\CAD Files\

Printed copy is

IF IN DOUBT...PLEASE ASK!

ITEM NO.	PART NUMBER	DESCRIPTION	Size	Toolbox Size	7.625 39-55.3#/QTY.
1	605769	Bump Plate	7-5/8"		1
2	606114	Dovetail Mandrel	7-5/8" 39-55.3# 500 Ton		1
3	700503	Lock Washer Internal Tooth		3/4	6
4	700804	PolyPak		3.75ODx3.250ID	1
5	700094	Safety Bolt		3/4-10 x 2 3/4	6
6	700016	Set Screw		3/8-16 x 1	6
7	605768	Slip	7-5/8" 39-55.3#		6
8	701255	Spring			6

ITEM NO.	PART NUMBER	DESCRIPTION	Size	606313 Redress Kit 606314 Overhaul/QTY.
50	606313	Redress Kit	DWCRT1K	1
51	606314	Overhaul Kit	7"-7-5/8"	1

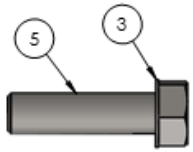

DETAIL RR
SCALE 1 : 2

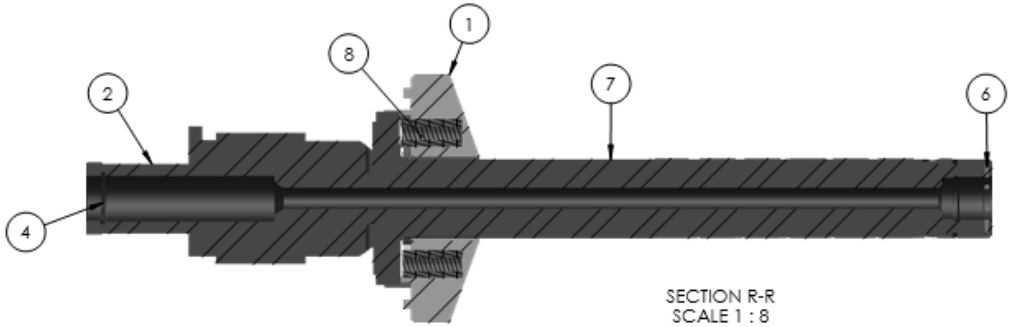

SECTION R-R
SCALE 1 : 8

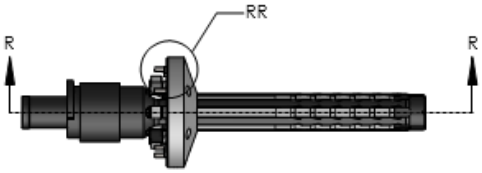

CRITICAL COMPONENT:

UNLESS OTHERWISE SPECIFIED:
DO NOT SCALE FOR DIMENSIONS. ALL DIMENSIONS ARE IN INCHES. REMOVE ALL BURRS. RADIUS ALL CORNERS .005/.015. BREAK ALL SHARP EDGES .005/.030 X 45° FOR .005/.030 R. DRILLED HOLES SHOULD BE ON THE PLUS SIDE OF THE TOLERANCE.

DECIMAL TOLERANCES		SURFACE FINISH	CONCENTRICITY
.X = ±.033	FRACTION ± 1/32	MACHINED 250RMS	MACHINED SURFACES OD - ID .010 TIR
.XX = ±.015	ANGULAR ± 0.50°	STRAIGHT THDS. 175RMS	ID - ID .010 TIR
.XXX = ±.005 PERPEND. ± 0.25°		TAPERED THDS. 125RMS	OD - OD .010 TIR
			AS R./MACH. .005 TIR

MATERIAL:

HEAT TREAT SPECS:
1:
2:
3:
4:

INTERPRET DRAWING PER ASME Y14.5-2009
MATERIAL AND PROCESS SPECIFICATIONS NUMBERS ON THIS DRAWING ARE TO ALWAYS REFERENCE THE LATEST APPROVED REVISION.

© 2011 DW RAW WORKS, INC. THIS DRAWING IS THE PROPERTY OF DW RAW WORKS, INC. AND MAY NOT BE COPIED OR REPRODUCED IN WHOLE OR IN PART IN ANY WAY WITHOUT THE EXPRESS WRITTEN CONSENT OF DW RAW WORKS, INC. THIS DOCUMENT AND ANY UNPUBLISHED WORK OF DW RAW WORKS, INC. ALL RIGHTS TO THIS WORK AND INTENT TO MAINTAIN THIS WORK CONFIDENTIAL AND AS A TRADE SECRET. DW RAW WORKS, INC. MAY ALSO SEEK TO PROTECT THIS WORK VIA ANY AVAILABLE COPYRIGHT, TRADEMARK, PATENT OR OTHER LEGAL OR EQUITABLE MEANS. THE INFORMATION IN THIS WORK MAY NOT BE USED, OR DISCLOSED, WITHOUT PRIOR WRITTEN AUTHORIZATION FROM DW RAW WORKS, INC.

DRAWN: JL DATE:
APPD.: TF DATE: 10/08/2018
REV. DWN. JL DATE: 10/16/2018
REV. APPD. RJ DATE: 10/18/2018

Project: DW0004
Description: Internal Grip Assembly 7-5/8" 7"-26"
Size:
DFT SCALE: 1:1 WEIGHT(lbs): 1351.438
Part NO.: 606289
REV.: A
SHEET 3 of 7

C:\DW_Vault\DW Jobs\Handling Tools\DW0004\CAD Files\

Printed copy is

IF IN DOUBT...PLEASE ASK!

ITEM NO.	PART NUMBER	DESCRIPTION	Size	Toolbox Size	9.625" 36-59.4# 9.875" 62.8#/QTY.
1	605461	Bump Plate	9-5/8"		1
2	606113	Dovetail Mandrel	9-5/8"-26" 1000 Ton		1
3	700503	Lock Washer Internal Tooth		3/4	6
4	700804	PolyPak		3.75ODx3.250ID	1
5	700094	Safety Bolt		3/4-10 x 2 3/4	6
6	700020	Set Screw		3/8-16 x 2	6
7	605459	Slip	9-5/8" 36-59.2#		6
8	701255	Spring			6
9	605539	Wear Guide Thread Protector	9-5/8"		1

ITEM NO.	PART NUMBER	DESCRIPTION	Size	606313 Redress Kit 606315 Overhaul Kit/QTY.
50	606313	Redress Kit	DWCRT1K	1
51	606315	Overhaul Kit	9-5/8"-11-3/4"	1

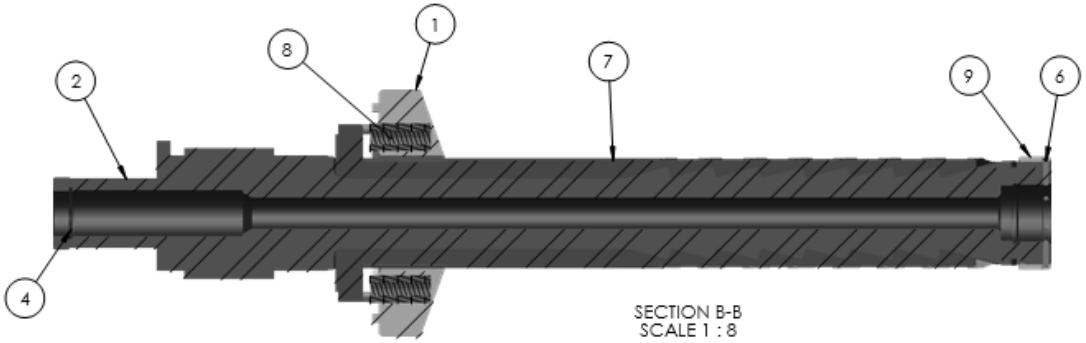

SECTION B-B
SCALE 1 : 8

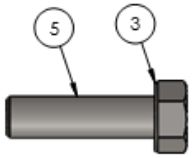

DETAIL BB
SCALE 1 : 2

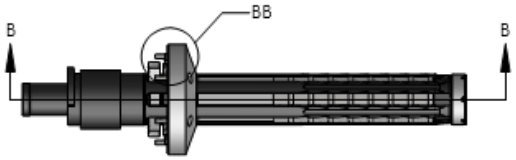

CRITICAL COMPONENT:

UNLESS OTHERWISE SPECIFIED:
DO NOT SCALE FOR DIMENSIONS. ALL DIMENSIONS ARE IN INCHES. REMOVE ALL BURRS. RADIUS ALL CORNERS .005/.015. BREAK ALL SHARP EDGES .005/.030 X 45° OR .005/.030 R. DRILLED HOLES SHOULD BE ON THE PLUS SIDE OF THE TOLERANCE.

DECIMAL TOLERANCES	FRACTION ± 1/32	SURFACE FINISH	CONCENTRICITY
.X = ±.033		MACHINED 250RMS	MACHINED SURFACES CO - ID .010 TIR
.XX = ±.015	ANGULAR ± 0.50°	STRAIGHT THDS. 175RMS	ID - ID .010 TIR
.XXX = ±.005 PERPEND. ± 0.35°		TAPERED THDS. 125RMS	CO - CO .010TIR
			AS R/MACH. .025 TIR

FINISH:

PROCESS SPECS:
1:
2:
3:
4:

INTERPRET DRAWING PER ASME Y14.5-2009
MATERIAL AND PROCESS SPECIFICATIONS NUMBERS ON THIS DRAWING ARE TO ALWAYS REFERENCE THE LATEST APPROVED REVISION.

© 2011, DRAW WORKS, INC. ALL RIGHTS RESERVED. THIS DRAWING AND ALL INFORMATION CONTAINED HEREIN IS THE PROPERTY OF DRAW WORKS, INC. AND MAY NOT BE COPIED OR REPRODUCED IN WHOLE OR IN PART IN ANY WAY WITHOUT THE EXPRESS WRITTEN CONSENT OF DW. THIS DOCUMENT AND/OR ANY UNPUBLISHED WORK OF DW, INCLUDING ALL RIGHTS TO THE WORK AND INTENDS TO MAINTAIN THE WORK CONFIDENTIAL AND AS A TRADE SECRET. DW MAY ALSO SEEK TO PROTECT THE WORK AS AN UNPUBLISHED COPYRIGHT. INDIVIDUALS HAVING ACCESS TO THE WORK MAY NOT COPY, USE OR DISCLOSE THE INFORMATION IN THE WORK UNLESS EXPRESSLY AUTHORIZED BY DW TO DO SO.

DRAW WORKS

DWN.	JL	DATE
APPD.	TF	DATE 10/08/2018
REV. DWN.	JL	DATE 10/16/2018
REV. APPD.	RU	DATE 10/18/2018

Project: DW0004

Description: Internal Grip Assembly

Size: 9-5/8" 7"-26"

SFT SCALE 1:1 WEIGHT(LBS) 1351.438

Part NO. 606289

REV. A

SHEET 4 of 7

C:\DW_Vault\DW Jobs\Handling Tools\DW0004\CAD Files\

Printed copy is

IF IN DOUBT...PLEASE ASK!

ITEM NO.	PART NUMBER	DESCRIPTION	Size	Toolbox Size	10.75 40.5-60.7#/QTY.
1	605745	Bump Plate	10-3/4"		1
2	606113	Dovetail Mandrel	9-5/8"-26" 1000 Ton		1
3	700503	Lock Washer Internal Tooth		3/4	6
4	700804	PolyPak		3.75ODx3.250ID	1
5	700094	Safety Bolt		3/4-10 x 2 3/4	6
6	700020	Set Screw		3/8-16 x 2	6
7	605516	Slip	10 3/4" 40.5-60.7#		6
8	701255	Spring			6
9	605462	Wear Guide	10-3/4"		6
10	605505	Wear Guide Nut			1

ITEM NO.	PART NUMBER	DESCRIPTION	Size	11.75 47-71#/QTY.
1	605744	Bump Plate	11-3/4"	1
7	605523	Slip	11-3/4" 47-71#	6
9	605524	Wear Guide	11-3/4" 47-71#	6

ITEM NO.	PART NUMBER	DESCRIPTION	Size	606313 Redress Kit 606315 Overhaul Kit/QTY.
50	606313	Redress Kit	DWCRT1K	1
51	606315	Overhaul Kit	9-5/8"-11-3/4"	1

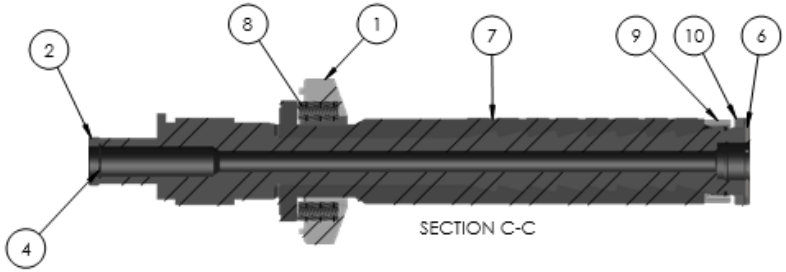

SECTION C-C

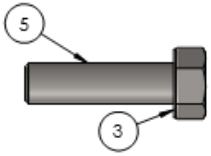

DETAIL CC
SCALE 1 : 2

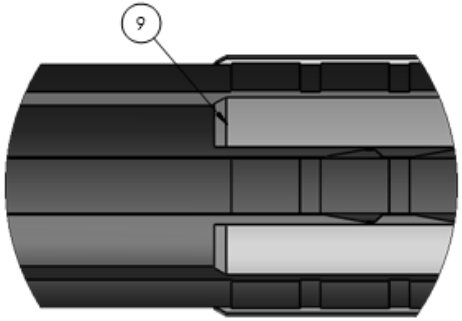

DETAIL CCC
SCALE 1 : 4

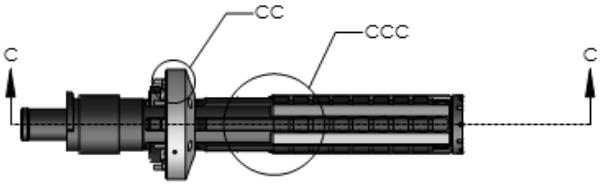

CRITICAL COMPONENT:

UNLESS OTHERWISE SPECIFIED

DO NOT SCALE FOR DIMENSIONS. ALL DIMENSIONS ARE IN INCHES. REMOVE ALL BURRS. RADIUS ALL CORNERS .005/.047. BREAK ALL SHARP EDGES .005/.020 X 45° OR .005/.020 R. DRILLED HOLES SHOULD BE ON THE PLUS SIDE OF THE TOLERANCE

DECIMAL TOLERANCES	FRACTION ± 1/32	SURFACE FINISH	CONCENTRICITY
.X = ±.032	ANGULAR ± 0.50°	MACHINED 250RMS	MACHINED SURFACES OD - ID .010 TIR
.XX = ±.015		STRAIGHT THDS. 175RMS	ID - ID .010 TIR
.XXX = ±.005 PERPEND. ± 0.25°		TAPERED THDS. 125RMS	OD - OD .010 TIR
		AS R/MACH. .025 TIR	

MATERIAL:

TREATMENT SPECS.
1:
2:
3:
4:

INTERPRET DRAWING PER ASME Y14.5-2009
MATERIAL AND PROCESS SPECIFICATIONS NUMBERS ON THIS DRAWING ARE TO ALWAYS REFERENCE THE LATEST APPROVED REVISION.

[illegible] COPIED OR REPRODUCED IN WHOLE OR IN PART IN ANY WAY WITHOUT THE EXPRESS WRITTEN CONSENT OF DW. THIS DOCUMENT ALSO IS AN UNPUBLISHED WORK OF DW. DW CLAIMS ALL RIGHTS TO THIS WORK AND INTENDS TO MAINTAIN THIS WORK CONFIDENTIAL AND AS A TRADE SECRET. DW MAY ALSO SEEK TO PROTECT THIS WORK IN ANY OTHER LEGAL WAY. [illegible] CONTAINING ALLOWS TO THE WORK MAY NOT COPY, USE, OR DISCLOSE THE INFORMATION IN THIS WORK UNLESS EXPRESSLY AUTHORIZED BY DW TO DO SO.

DRAW ORKS

DWN.	JL	DATE
APPD.	TF	DATE 10/08/2018
REV. DWN.	JL	DATE 10/16/2018
REV. APPD.	RU	DATE 10/18/2018

Project: DW0004

Description: Internal Grip Assembly 10-3/4" - 11-3/4" 7"-26"

Size

DFT SCALE 1:1 WEIGHT (LBS) 1351.438

Part NO. 606289 REV. A SHEET 5 of 7

C:\DW_Vault\DW Jobs\Handling Tools\DW0004\CAD Files\

Printed copy is

IF IN DOUBT...PLEASE ASK!

ITEM NO.	PART NUMBER	DESCRIPTION	Size	Toolbox Size	13.375 54.4-85# 13.625 88.2#/QTY.
1	605680	Base Slip	13-3/8"-26" 1000 Ton		6
2	700011	Bolt			24
3	605447	Bump Plate	13-3/8"-20"		1
4	606113	Dovetail Mandrel	9-5/8"-26" 1000 Ton		1
5	605681	Insert	13-3/8" 54.4-85#		6
6	700500	Lock Washer Internal Tooth		1/2	24
7	700503	Lock Washer Internal Tooth		3/4	6
8	700804	PolyPak		3.75ODx3.250ID	1
9	700094	Safety Bolt		3/4-10 x 2 3/4	6
10	700020	Set Screw		3/8-16 x 2	6
11	701255	Spring			6
12	605683	Wear Guide	13-3/8" 54.4-85 #		1
13	605505	Wear Guide Nut			1

ITEM NO.	PART NUMBER	DESCRIPTION	Size	606316 Redress Kit 606317 Overhaul Kit/QTY.
50	606316	Redress Kit	13-3/8"-26"	1
51	606317	Overhaul Kit	13-3/8"-26"	1

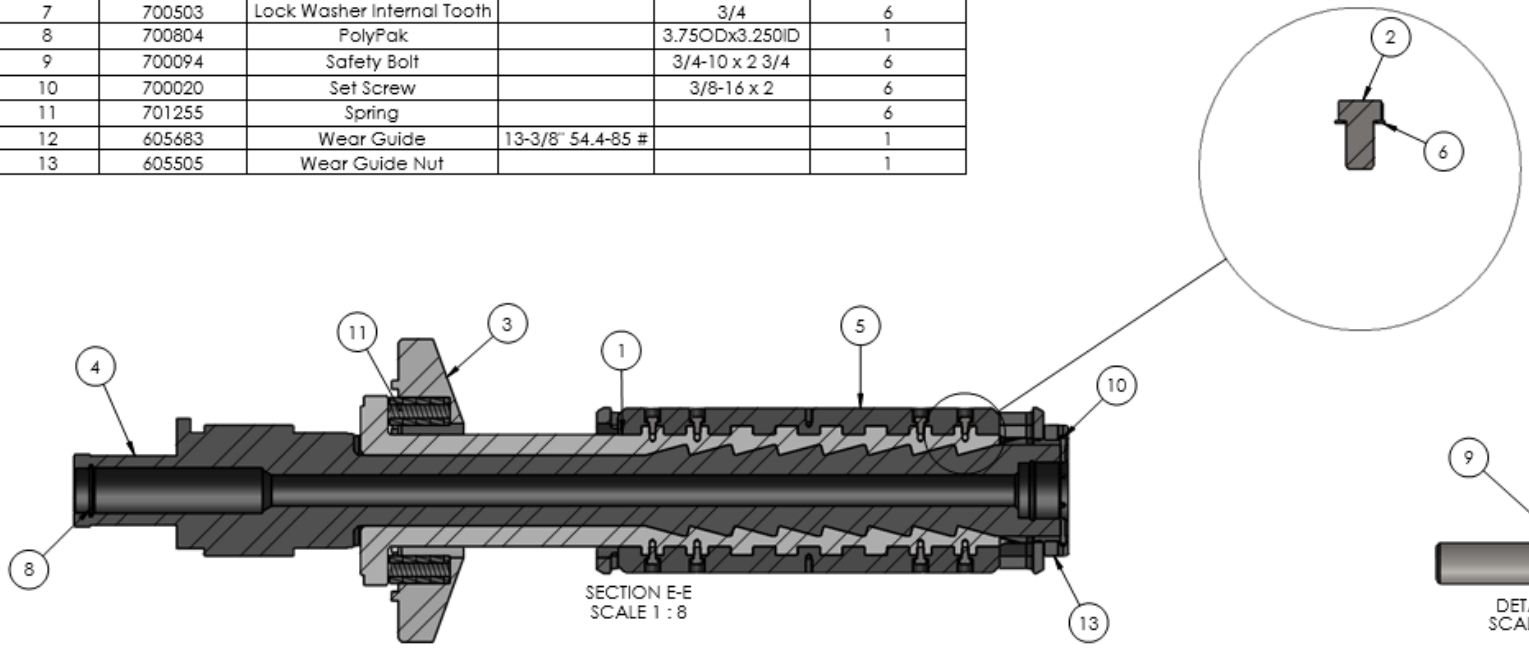

SECTION E-E
SCALE 1 : 8

DETAIL EE
SCALE 1 : 2

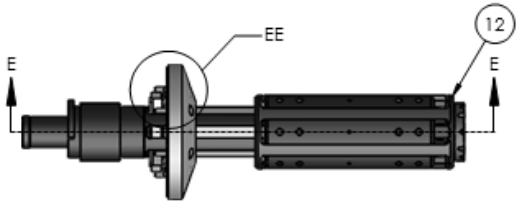

CRITICAL COMPONENT:

DO NOT SCALE FOR DIMENSIONS. ALL DIMENSIONS ARE IN INCHES. REMOVE ALL BURRS. RADIUS ALL CORNERS .005' OUT. BREAK ALL SHARP EDGES .005/.030 X 45° OR .005/.030 R. DRILLED HOLES SHOULD BE ON THE PLUS SIDE OF THE TOLERANCE

DECIMAL TOLERANCES		SURFACE FINISH	CONCENTRICITY
.X = ±.032	FRACTION ± 1/32	MACHINED 250RMS	MACHINED SURFACES OD - ID .010 TIR
.XX = ±.015	ANGULAR ± 0.50°	STRAIGHT THDS. 175RMS	ID - ID .010 TIR
.XXX = ±.005	PERPEND. ± 0.25°	TAPERED THDS. 125RMS	OD - OD .010 TIR
			AS R/MACH. .025 TIR

MATERIAL:

FTS C.S.S. STYLE 1:
1:
2:
3:
4:

INTERPRET DRAWING PER ASME Y14.5-2009
MATERIAL AND PROCESS SPECIFICATIONS NUMBERS ON THE DRAWING ARE TO ALWAYS REFERENCE THE LATEST APPROVED REVISION.

© 2013 DW WORKS, LLC. ALL RIGHTS RESERVED. THIS DRAWING MAY NOT BE COPIED OR REPRODUCED IN WHOLE OR IN PART IN ANY WAY WITHOUT THE EXPRESS WRITTEN CONSENT OF DW. THIS DOCUMENT AND/OR ANY UNPUBLISHED WORK OF DW, DW OWNS ALL RIGHTS TO THE WORK AND INTENDS TO MAINTAIN THE WORK CONFIDENTIAL AND AS A TRADE SECRET. DW MAY ALSO SEEK TO PROTECT THE WORK AS AN UNPUBLISHED COPYRIGHT. UNAUTHORIZED ACCESS TO THE WORK MAY NOT COPY, USE, OR DISCLOSE THE PROPRIETARY INFORMATION IN THE WORK UNLESS EXPRESSLY AUTHORIZED BY DW TO DO SO.

DRAW WORKS

DWN.	JL	DATE
APPD.	TF	DATE 10/08/2018
REV. DWN.	JL	DATE 10/16/2018
REV. APPD.	RU	DATE 10/18/2018

Project: DW0004
Description: Internal Grip Assembly
Size: 13-3/8" - 26"
7"-26"

DFT SCALE 1:1 WEIGHT(LBS) 1351.438

Part NO. 606289 | REV. A | SHEET 6 of 7

C:\DW_Vault\DW Jobs\Handling Tools\DW0004\CAD Files\

Printed copy is

IF IN DOUBT...PLEASE ASK!

ITEM NO.	PART NUMBER	DESCRIPTION	Size	16 65-109#/QTY.
5	605510	Insert	16" 65-109#	6
12	605511	Wear Guide	16" 65-109 #	1

ITEM NO.	PART NUMBER	DESCRIPTION	Size	26" 202-275#/QTY.
5	605521	Insert	26" 202-275"	6
12	605522	Wear Guide	26" 202-275#	1

ITEM NO.	PART NUMBER	DESCRIPTION	Size	18.625 87.5-136#/QTY.
5	605512	Insert	18-5/8 87.5-136#	6
12	605513	Wear Guide	18-5/8" 87-136#	1

ITEM NO.	PART NUMBER	DESCRIPTION	Size	606316 Redress Kit 606317 Overhaul Kit/QTY.
50	606316	Redress Kit	13-3/8"-26"	1
51	606317	Overhaul Kit	13-3/8"-26"	1

ITEM NO.	PART NUMBER	DESCRIPTION	Size	20" 94-133#/QTY.
5	605682	Insert	20" 94-133#	6
12	605684	Wear Guide	20" 94-133 #	1

ITEM NO.	PART NUMBER	DESCRIPTION	Size	20" 163-187#/QTY.
5	605514	Insert	20" 163-187#	6
12	605515	Wear Guide	20" 163-187#	1

ITEM NO.	PART NUMBER	DESCRIPTION	Size	22" 170-224#/QTY.
5	605517	Insert	22" 170-224#	6
12	605518	Wear Guide	22" 170-224#	1

ITEM NO.	PART NUMBER	DESCRIPTION	Size	24" 171-216 #/QTY.
5	605519	Insert	24" 171-216#	6
12	605520	Wear Guide	24" 171-216#	1

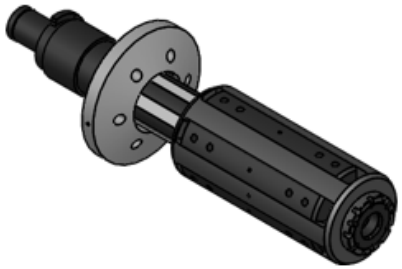

CRITICAL COMPONENT:

UNLESS OTHERWISE SPECIFIED

DO NOT SCALE FOR DIMENSIONS. ALL DIMENSIONS ARE IN INCHES. REMOVE ALL BURRS. RADIUS ALL CORNERS .005" (0.0). BREAK ALL SHARP EDGES .005"-.020 X 45° (OR .005"-.020 R. DRILLED HOLES SHOULD BE ON THE PLUS SIDE OF THE TOLERANCE

DECIMAL TOLERANCES		SURFACE FINISH	CONCENTRICITY
.X = ±.033	FRACTION ± 1/32	MACHINED 250RMS	MACHINED SURFACES OD - ID .010 TIR
.XX = ±.015	ANGULAR ± 0.50°	STRAIGHT THDS. 175RMS	ID - ID .010 TIR
.XXX = ±.005	PERPEND. ± 0.25°	TAPERED THDS. 125RMS	OD - OD .010 TIR
			AS R/MACH. .005 TIR

DRAWN:

FINISH SPECS:
1:
2:
3:
4:

INTERPRET DRAWING PER ASME Y14.5-2009
MATERIAL AND PROCESS SPECIFICATIONS NUMBERS ON THIS DRAWING ARE TO ALWAYS REFERENCE THE LATEST APPROVED REVISION.
PROPRIETARY INFORMATION: THIS DRAWING IS THE PROPERTY OF DRAW WORKS AND IS NOT TO BE COPIED OR REPRODUCED IN WHOLE OR IN PART IN ANY WAY WITHOUT THE EXPRESS WRITTEN CONSENT OF DW. THIS DOCUMENT AND/OR AN UNPUBLISHED WORK OF DW. DW OWNS ALL RIGHTS TO THIS WORK AND INTENDS TO MAINTAIN THIS WORK CONFIDENTIAL AND AS A TRADE SECRET. DW MAY ALSO SEEK TO PROTECT THIS WORK AS AN UNPUBLISHED COPYRIGHT. THOSE HAVING ACCESS TO THE WORK MAY NOT COPY, USE OR DISCLOSE THE INFORMATION IN THIS WORK UNLESS EXPRESSLY AUTHORIZED BY DW TO DO SO.

DRAWN:	JL	DATE
APPD:	TF	DATE 10/08/2018
REV. DWN:	JL	DATE 10/16/2018
REV. APPD:	RU	DATE 10/18/2018

Project: DW0004

Description: Internal Grip Assembly

Size: 13-3/8" - 26" 7"-26"

DFT SCALE: 1:1 WEIGHT(LBS): 1351.438

Part NO.: 606289

REV.: A

SHEET 7 of 7

C:\DW_Vault\DW Jobs\Handling Tools\DW0004\CAD Files\

Printed copy is

10.4 External Grip Assembly, 4-1/2” – 7-5/8”

IF IN DOUBT...PLEASE ASK!

ITEM NO.	PART NUMBER	DESCRIPTION	Toolbox Size	Size	5.5"/QTY.
1	606301	Basket		500 Ton External	1
2	606507	Bell Guide		5-1/2"	1
3	700711	Bolt	1/2-13 x 2 1/4		6
4	605813	Bump Plate			1
5	606430	Dovetail Mandrel Nut			1
6	605982	Key Mandrel-Upper Housing		500 Ton External	6
7	700500	Lock Washer Internal Tooth	1/2		12
8	605984	Lower Housing		500 Ton External	1
9	606062	Lower Safety Clamp			2
10	605978	Mandrel		500 Ton External	1
11	700670	O-Ring	2-325		6
12	700671	O-Ring	2-430		1
13	700820	O-Ring	2-446		1

ITEM NO.	PART NUMBER	DESCRIPTION	Toolbox Size	Size	5.5"/QTY.
14	700802	PolyPak	3.00ODx2.500ID		1
15	606580	Ramp Segment			6
16	606300	Rod		500 Ton External	6
17	605981	Rod Head		500 Ton External	6
18	700008	Safety Bolt	1/2-13 x 2		6
19	701356	Set Screw	3/8-16 x 7/8		6
20	701352	Set Screw	3/8-16 x 3/4		6
21	700002	Set Screw	3/8-16 x 5/8		6
22	701358	Set Screw	5/8-11 x 1 3/4		3
23	701160	Shackle	3/4" 4-3/4 Ton		2
24	606011	Slip		5-1/2"	6
25	701254	Spring			6
26	606561	Upper Housing			1
27	606513	Wear Guide		5-1/2"	1
28	606512	Wear Guide Lock			1
29	606581	Ramp Segment Spacer			6

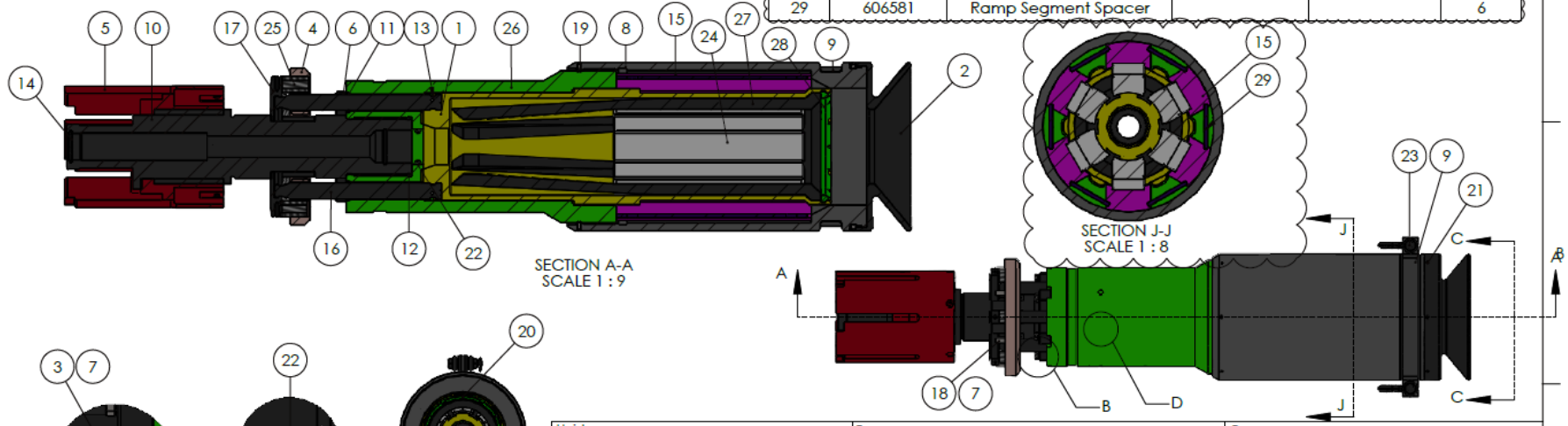

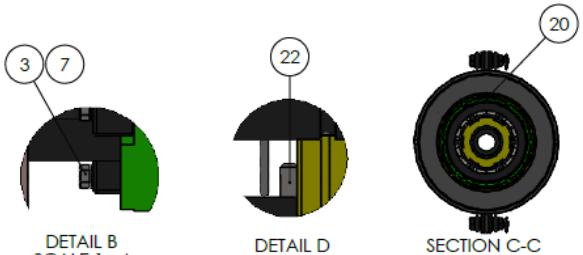

Hoist: | Torque: | Pressure:

CRITICAL COMPONENT:

UNLESS OTHERWISE SPECIFIED

DO NOT SCALE FOR DIMENSIONS. ALL DIMENSIONS ARE IN INCHES. REMOVE ALL BURRS. RADIUS ALL CORNERS .025/.047. BREAK ALL SHARP EDGES .005/.020 X 45° OR .005/.020 R. DRILLED HOLES SHOULD BE ON THE PLUS SIDE OF THE TOLERANCE.

DECIMAL TOLERANCES		SURFACE FINISH		CONCENTRICITY	
.X = ±.032	FRACTION ± 1/32	MACHINED	250RMS	MACHINED SURFACES OD - ID	.010 TIR
.XX = ±.015	ANGULAR ± 0.50°	STRAIGHT THDS.	175RMS	ID - ID	.010 TIR
.XXX = ±.005	PERPEND. ± 0.25°	TAPERED THDS.	125RMS	OD - OD	.010 TIR
				AS R/MACH.	.025 TIR

MATERIAL

PROCESS SPECS.
1:
2:
3:
4:

INTERPRET DRAWING PER ASME Y14.5-2009
MATERIAL AND PROCESS SPECIFICATIONS NUMBERS ON THIS DRAWING ARE TO ALWAYS REFERENCE THE LATEST APPROVED REVISION.

©2018 BY DRAWORKS, L.P. - BOLING DEVELOPMENT GENERAL PARTNER
THIS DOCUMENT IS CONFIDENTIAL AND IS THE PROPERTY OF DRAWORKS, L.P. (DW). IT MAY NOT BE COPIED OR REPRODUCED IN WHOLE OR IN PART IN ANY WAY WITHOUT THE EXPRESS WRITTEN CONSENT OF DW. THIS DOCUMENT ALSO IS AN UNPUBLISHED WORK OF DW. DW OWNS ALL RIGHTS TO THIS WORK AND INTENDS TO MAINTAIN THIS WORK CONFIDENTIAL AND AS A TRADE SECRET. DW MAY ALSO SEEK TO PROTECT THIS WORK AS AN UNPUBLISHED COPYRIGHT. THOSE HAVING ACCESS TO THE WORK MAY NOT COPY, USE, OR DISCLOSE THE INFORMATION IN THIS WORK UNLESS EXPRESSLY AUTHORIZED BY DW TO DO SO.

DWN.	JL	DATE	9/7/2018
APPD.	RU	DATE	03/08/2019
REV. DWN.	CH	DATE	04/24/2019
REV. APPD.	JL	DATE	05/07/2019

Project: DW0003

Description: External Gripping Assembly

Size: 4-1/2-7-5/8"

DFT SCALE 1:2 | WEIGHT (LBS)

Part NO. 606280 | REV. D | SHEET 1 of 3

C:\DW_Vault\DW Jobs\Handling Tools\DW0003\DW0003.2\CAD Files\

Printed copy is **UNCONTROLLED**

IF IN DOUBT...PLEASE ASK!

ITEM NO.	PART NUMBER	DESCRIPTION	Size	4.5"/QTY.
2	606505	Bell Guide	4-1/2"	1
24	606013	Slip	4-1/2"	6
26	606437	Wear Guide (Leaf Spring Version)	4-1/2"	1

ITEM NO.	PART NUMBER	DESCRIPTION	Size	5"/QTY.
2	606506	Bell Guide	5"	1
24	606012	Slip	5"	6
26	606438	Wear Guide (Leaf Spring Version)	5"	1

ITEM NO.	PART NUMBER	DESCRIPTION	Size	5.5" /QTY.
22	606011	Slip	5-1/2"	6
28	606578	Bell Guide Assembly with Dogs	5-1/2"	1

ITEM NO.	PART NUMBER	DESCRIPTION	Size	6"/QTY.
2	606508	Bell Guide	6"	1
24	606010	Slip	6"	6
27	606439	Wear Guide	6"	1

ITEM NO.	PART NUMBER	DESCRIPTION	Size	6.625"/QTY.
2	606365	Bell Guide	6-5/8"	1
24	606335	Slip	6-5/8"	6
27	606334	Wear Guide (Lead Spring Version)	6-5/8"	1

ITEM NO.	PART NUMBER	DESCRIPTION	Size	6.625 Flush/QTY.
2	606365	Bell Guide	6-5/8"	1
24	606335	Slip	6-5/8"	6
27	606515	Wear Guide (Leaf Spring Version)	6-5/8 Flush	1

ITEM NO.	PART NUMBER	DESCRIPTION	Size	7"/QTY.
2	606361	Bell Guide Assembly	7"	1
24	606009	Slip	7"	6
27	606516	Wear Guide	7"	1

ITEM NO.	PART NUMBER	DESCRIPTION	Size	7.625"/QTY.
2	606362	Bell Guide Assembly	7-5/8"	1
24	606008	Slip	7-5/8"	6
28	606002	Wear Guide Ring	7-5/8"	1

PART NUMBER	DESCRIPTION	Toolbox Size	606211 Overhaul Kit/QTY.	606212 Rebuild Kit/QTY.	606213 Redress Kit/QTY.
700711	Bolt	1/2-13 x 2 1/4	6	6	-
700500	Lock Washer Internal Tooth	1/2	12	12	-
700670	O-Ring	2-325	6	6	-
700671	O-Ring	2-430	1	1	1
700820	O-Ring	2-446	1	1	1
700802	PolyPak	3.00ODx2.500ID	1	1	1
700008	Safety Bolt	1/2-13 x 2	6	6	-
701356	Set Screw	3/8-16 x 7/8	6	6	-
701352	Set Screw	3/8-16 x 3/4	6	6	-
701358	Set Screw	5/8-11 x 1 3/4	3	3	-
701254	Spring		6	-	-
700002	Set Screw	3/8-16 x 5/8	6	6	-

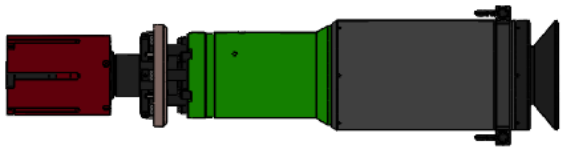

Hoist: | Torque: | Pressure:

CRITICAL COMPONENT:

UNLESS OTHERWISE SPECIFIED

DO NOT SCALE FOR DIMENSIONS. ALL DIMENSIONS ARE IN INCHES. REMOVE ALL BURRS. RADIUS ALL CORNERS .025/.047. BREAK ALL SHARP EDGES .005/.020 X 45° OR .005/.020 R. DRILLED HOLES SHOULD BE ON THE PLUS SIDE OF THE TOLERANCE

DECIMAL TOLERANCES		SURFACE FINISH	CONCENTRICITY
.X = ±.032	FRACTION ± 1/32	MACHINED 250RMS	MACHINED SURFACES OD - ID .010 TIR
.XX = ±.015	ANGULAR ± 0.50°	STRAIGHT THDS. 175RMS	ID - ID .010 TIR
.XXX = ±.005	PERPEND. ± 0.25°	TAPERED THDS. 125RMS	OD - OD .010 TIR
		AS R/MACH. .005 TIR	

MATERIAL

PROCESS SPECS.
1:
2:
3:
4:

INTERPRET DRAWING PER ASME Y14.5-2009
MATERIAL AND PROCESS SPECIFICATIONS NUMBERS ON THIS DRAWING ARE TO ALWAYS REFERENCE THE LATEST APPROVED REVISION.

©2018 BY DRAWWORKS, L.P. - BOLING DEVELOPMENT GENERAL PARTNER
THIS DOCUMENT IS CONFIDENTIAL AND IS THE PROPERTY OF DRAWWORKS, LP. DW1 IT MAY NOT BE COPIED OR REPRODUCED IN WHOLE OR IN PART IN ANY WAY WITHOUT THE EXPRESS WRITTEN CONSENT OF DW. THIS DOCUMENT ALSO IS AN UNPUBLISHED WORK OF DW. DW OWNS ALL RIGHTS TO THIS WORK, AND INTENDS TO MAINTAIN THIS WORK CONFIDENTIAL AND AS A TRADE SECRET. DW MAY ALSO SEEK TO PROTECT THIS WORK AS AN UNPUBLISHED COPYRIGHT. THOSE HAVING ACCESS TO THE WORK MAY NOT COPY, USE, OR DISCLOSE THE INFORMATION IN THIS WORK UNLESS EXPRESSLY AUTHORIZED BY DW TO DO SO.

DWN. JL	DATE 09/07/2018	
APPD. RU	DATE 03/08/2019	
REV. DWN. CH	DATE 04/24/2019	
REV. APPD. JL	DATE 05/07/2019	

Project: DW0003

Description: External Gripping Assembly

Size: 4-1/2-7-5/8"

DFT SCALE 1:2 | WEIGHT(LBS)

Part NO. 606280 | REV. D | SHEET 2 of 3

C:\DW_Vault\DW Jobs\Handling Tools\DW0003\DW0003.2\CAD Files\

Printed copy is **UNCONTROLLED**

10.5 Bell Guide Assembly, 5-1/2”

IF IN DOUBT...PLEASE ASK!

ITEM NO.	PART NUMBER	DESCRIPTION	QTY.
1	606171	Bell Guide with Dogs	1
2	700753	Countersunk Screw	6
3	606582	Dog	6
4	606165	Dog Retainer	1
5	606087	Dog Spring Tensioner	6
6	700654	Spring	6

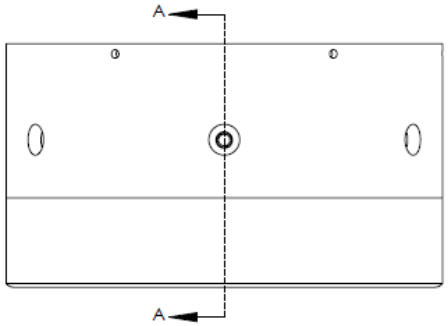

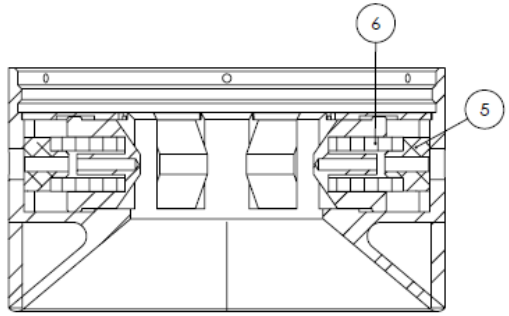

SECTION A-A
SCALE 1 : 4

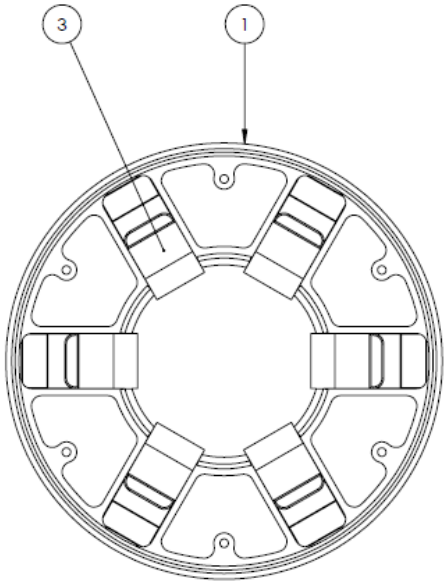

Dog Retainer, and Countersunk Screws
Hidden for clarity.

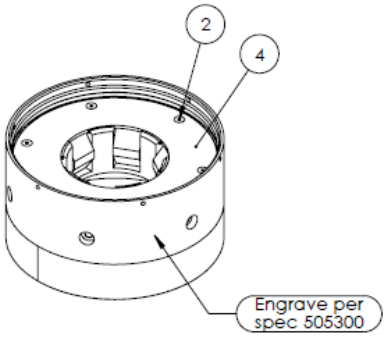

Hoist: -
Torque: -
Pressure: -

CRITICAL COMPONENT:

UNLESS OTHERWISE SPECIFIED
DO NOT SCALE FOR DIMENSIONS. ALL DIMENSIONS ARE IN INCHES. REMOVE ALL BURRS. RADIUS ALL CORNERS .025/.047. BREAK ALL SHARP EDGES .005/.020 X 45° OR .005/.020 R DRILLED HOLES SHOULD BE ON THE PLUS SIDE OF THE TOLERANCE

DECIMAL TOLERANCES		SURFACE FINISH	CONCENTRICITY
.X = ±.082	FRACTION ± 1/32	MACHINED 250RMS	MACHINED SURFACES OD - ID .010 TIR
.XX = ±.015	ANGULAR ± 0.50°	STRAIGHT THDS. 175RMS	ID - ID .010 TIR
.XXX = ±.005	PERPEND. ± 0.25°	TAPERED THDS. 125RMS	OD - OD .010 TIR
		AS R./MACH. .025 TIR	

MATERIAL
PROCESS SPECS.
1:
2:
3:
4:

INTERPRET DRAWING PER ASME Y14.5-2009
MATERIAL AND PROCESS SPECIFICATIONS NUMBERS ON THIS DRAWING ARE TO ALWAYS REFERENCE THE LATEST APPROVED REVISION.
©2019 BY DRAWWORKS, L.P. - BOLING DEVELOPMENT GENERAL PARTNER
THIS DOCUMENT IS CONFIDENTIAL AND IS THE PROPERTY OF DRAWWORKS, L.P. (DW). IT MAY NOT BE COPIED OR REPRODUCED IN WHOLE OR IN PART IN ANY WAY WITHOUT THE EXPRESS WRITTEN CONSENT OF DW. THIS DOCUMENT ALSO IS AN UNPUBLISHED WORK OF DW. DW OWNS ALL RIGHTS TO THE WORK AND INTENDS TO MAINTAIN THIS WORK CONFIDENTIAL AND AS A TRADE SECRET. DW MAY ALSO SEEK TO PROTECT THIS WORK AS AN UNPUBLISHED COPYRIGHT. THOSE HAVING ACCESS TO THE WORK MAY NOT COPY, USE, OR DISCLOSE THE INFORMATION IN THIS WORK UNLESS EXPRESSLY AUTHORIZED BY DW TO DO SO.

DWN.	JL	DATE	04/30/2019
APPD.	TF	DATE	05/06/2019
REV. DWN.		DATE	
REV. APPD.		DATE	

Project: DW0003
Description: Bell Guide Assembly with Dogs
Size: 5-1/2"
DPI SCALE: 1:8 WEIGHT(LBS)
Part NO. 606578
REV. A - SHEET 1 of 1

C:\DW_Vault\DW Jobs\Handling Tools\DW0003\DW0003.2\CAD Files\

Printed copy is **UNCONTROLLED**

10.6 Bell Guide Assembly, 7”

IF IN DOUBT...PLEASE ASK!

ITEM NO.	PART NUMBER	DESCRIPTION	QTY.
1	606173	Bell Guide	1
2	700753	Countersunk Screw	6
3	606582	Dog	6
4	606167	Dog Retainer	1
5	606531	Dog Spring Tensioner	6
6	700654	Spring	6

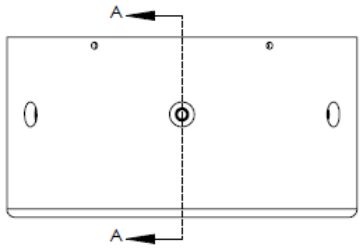

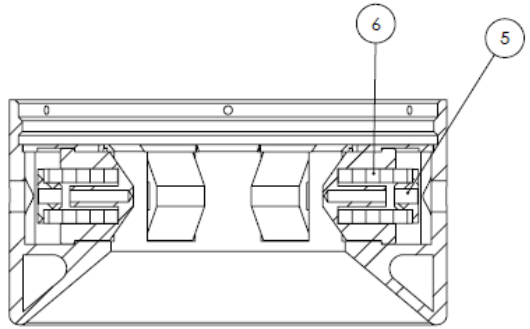

SECTION A-A

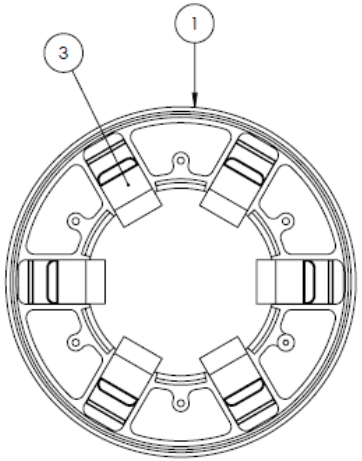

Dog Retainer, Countersunk Screws Hidded for clarity.

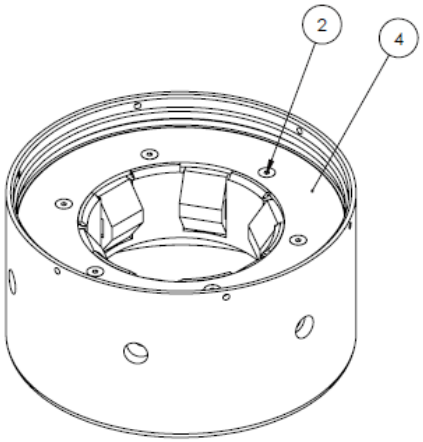

Hoist: -

Torque: -

Pressure: -

CRITICAL COMPONENT: No

UNLESS OTHERWISE SPECIFIED

DO NOT SCALE FOR DIMENSIONS. ALL DIMENSIONS ARE IN INCHES. REMOVE ALL BURRS. RADIUS ALL CORNERS .005/.047. BREAK ALL SHARP EDGES .005/.030 X 45° OR .005/.030 R DRILLED HOLES SHOULD BE ON THE PLUS SIDE OF THE TOLERANCE

DECIMAL TOLERANCES		SURFACE FINISH		CONCENTRICITY	
.X = ±.032	FRACTION ± 1/32	MACHINED 250RMS	MACHINED SURFACES	OD - ID	.010 TIR
.XX = ±.015	ANGULAR ± 0.50°	STRAIGHT THDS. 175RMS		ID - ID	.010 TIR
.XXX = ±.005	PERPEND. ± 0.25°	TAPERED THDS. 125RMS		OD - OD	.010 TIR
				AS R /MACH.	.005 TIR

MATERIAL

PROCESS SPECS.
1:
2:
3:
4:

INTERPRET DRAWING PER ASME Y14.5-2009
MATERIAL AND PROCESS SPECIFICATIONS NUMBERS ON THIS DRAWING ARE TO ALWAYS REFERENCE THE LATEST APPROVED REVISION.

©2019 BY DRAWWORKS, L.P. - BOUNG DEVELOPMENT GENERAL PARTNER
THIS DOCUMENT IS CONFIDENTIAL AND IS THE PROPERTY OF DRAWWORKS, L.P. (DW). IT MAY NOT BE COPIED OR REPRODUCED IN WHOLE OR IN PART IN ANY WAY WITHOUT THE EXPRESS WRITTEN CONSENT OF DW. THIS DOCUMENT ALSO IS AN UNPUBLISHED WORK OF DW. DW OWNS ALL RIGHTS TO THIS WORK AND INTENDS TO MAINTAIN THIS WORK CONFIDENTIAL AND AS A TRADE SECRET. DW MAY ALSO SEEK TO PROTECT THIS WORK AS AN UNPUBLISHED COPYRIGHT. THOSE HAVING ACCESS TO THE WORK MAY NOT COPY, USE, OR DISCLOSE THE INFORMATION IN THIS WORK UNLESS EXPRESSLY AUTHORIZED BY DW TO DO SO.

DWN.	JL	DATE	10/30/2018
APPD.	RU	DATE	03/08/2019
REV. DWN.	JL	DATE	05/06/2019
REV. APPD.	TF	DATE	05/06/2019

Project: DW0003

Description: Bell Guide Assembly

Size: 7"

DFT SCALE 1:4 WEIGHT(LBS) 134.42

Part NO. 606361 REV. C SHEET 1 of 1

C:\DW_Vault\DW Jobs\Handling Tools\DW0003\DW0003.2\CAD Files\

Printed copy is **UNCONTROLLED**

10.7 Bell Guide Assembly, 7-5/8”

IF IN DOUBT...PLEASE ASK!

ITEM NO.	PART NUMBER	DESCRIPTION	QTY.
1	606174	Bell Guide	1
2	700753	Countersunk Screw	6
3	606582	Dog	6
4	606168	Dog Retainer	1
5	700654	Spring	6
6	700783	Washer Wide	6

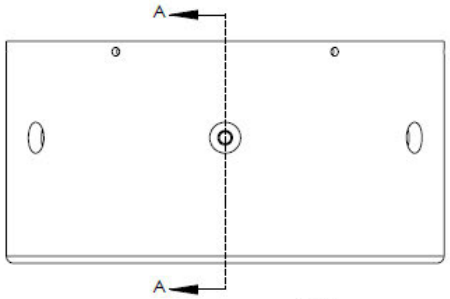

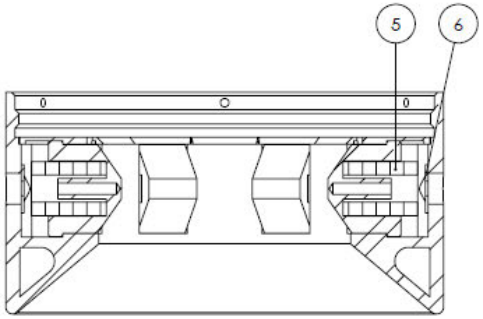

SECTION A-A

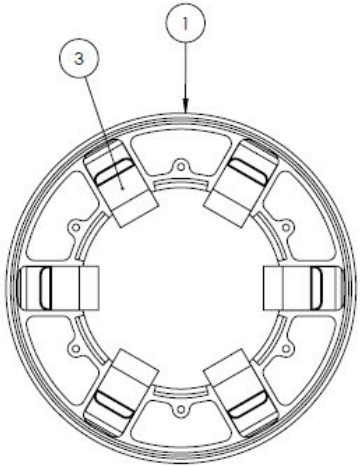

Dog Retainer, and Countersunk Screws Hidden for clarity.

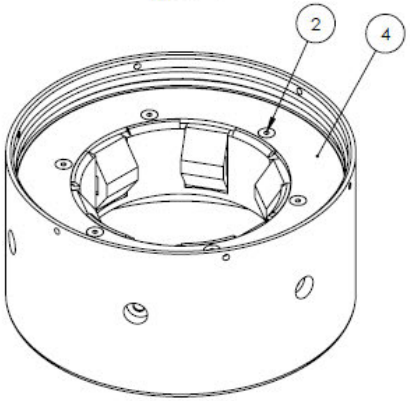

Hoist: | Torque: | Pressure:

CRITICAL COMPONENT: No

UNLESS OTHERWISE SPECIFIED
DO NOT SCALE FOR DIMENSIONS. ALL DIMENSIONS ARE IN INCHES. REMOVE ALL BURRS. RADIUS ALL CORNERS .025/.047. BREAK ALL SHARP EDGES .005/.020 X 45° OR .005/.020 R DRILLED HOLES SHOULD BE ON THE PLUS SIDE OF THE TOLERANCE

DECIMAL TOLERANCES		SURFACE FINISH	CONCENTRICITY
.X = ±.032	FRACTION ± 1/32	MACHINED 250RMS	MACHINED SURFACES OD - ID .010 TIR
.XX = ±.015	ANGULAR ± 0.50°	STRAIGHT THDS. 175RMS	ID - ID .010 TIR
.XXX = ±.005	PERPEND. ± 0.25°	TAPERED THDS. 125RMS	CO - OD .010 TIR
			AS R/MACH. .005 TIR

MATERIAL:
PROCESS SPECS.
1:
2:
3:
4:

INTERPRET DRAWING PER ASME Y14.5-2009
MATERIAL AND PROCESS SPECIFICATIONS NUMBERS ON THIS DRAWING ARE TO ALWAYS REFERENCE THE LATEST APPROVED REVISION.

©2019 BY DRAWWORKS, L.P. ; BOLING DEVELOPMENT GENERAL PARTNER
THIS DOCUMENT IS CONFIDENTIAL AND IS THE PROPERTY OF DRAWWORKS, L.P. (DW). IT MAY NOT BE COPIED OR REPRODUCED IN WHOLE OR IN PART IN ANY WAY WITHOUT THE EXPRESS WRITTEN CONSENT OF DW. THIS DOCUMENT ALSO IS AN UNPUBLISHED WORK OF DW. DW OWNS ALL RIGHTS TO THIS WORK AND INTENDS TO MAINTAIN THIS WORK CONFIDENTIAL AND AS A TRADE SECRET. DW MAY ALSO SEEK TO PROTECT THIS WORK AS AN UNPUBLISHED COPYRIGHT. THOSE HAVING ACCESS TO THE WORK MAY NOT COPY, USE, OR DISCLOSE THE INFORMATION IN THIS WORK UNLESS EXPRESSLY AUTHORIZED BY DW TO DO SO.

DWN. JL	DATE 4/10/2018	
APPD. RU	DATE 03/08/2019	
REV. DWN. JL	DATE 05/06/2019	
REV. APPD. TF	DATE 05/06/2019	

Project: DW0003
Description: Bell Guide Assembly
Size: 7-5/8"
DFT SCALE 1:4 WEIGHT(LBS)
Part NO. 606362 REV. C SHEET 1 of 1

C:\DW_Vault\DW Jobs\Handling Tools\DW0003\DW0003.2\CAD Files\

Printed copy is **UNCONTROLLED**

10.8 Internal Circulating Assemblies

10.8.1 Internal Circulators, 4-1/2" – 6-5/8"

IF IN DOUBT...PLEASE ASK!

ITEM NO.	PART NUMBER	DESCRIPTION	Size	Toolbox Size	QTY.
1	601094	Cup Lock Sleeve	4-1/2"-5"		1
2	605102	Circulator Body	4-1/2"-6-5/8"		1
3	601092	Cup Spacer	4-1/2" & 5"		1
4	601096	GageRing	4-1/2" 9.5-11.6# 10.5#		1
5	605837	Nose	4-1/2"-6-5/8"		1
6	700605	O-Ring		2-325	2
7	700611.	O-Ring		2-229	2
8	601107	Packer Cup	4-1/2" 9.5-11.6#		1
9	701351	Set Screw		3/8-16 x 3/8	3
10	601114	Thimble	4-1/2" 9.5-13.5#		1

Other Thimble, Gage Rings, and Packer Cup Sizes	
605276	4-1/2" 15.1-17.1# Thimble
601115	5" 15-21.4# Thimble
601097	4-1/2" 12.6-13.5# Gage Ring
601988	4-1/2" 15.10# Gage Ring
601098	5" 15-18# Gage Ring
601099	5" 18-21.4# Gage Ring
603506	5" 15# Gage Ring
601103	5" 23.2# Gage Ring
602087	4-1/2" 10.5# Packer Cup
601108	4-1/2" 12.6-13.5 # Packer Cup
601921	4-1/2" 15.10# Packer Cup
601109	5" 15-18# Packer Cup
603529	5" 18# Packer Cup
601110	5" 18-21.4# Packer Cup
602604	5" 23.2# Packer Cup

Sea Kit
Part # 605104 Includes
2) 700605
2) 700611
3) 701351

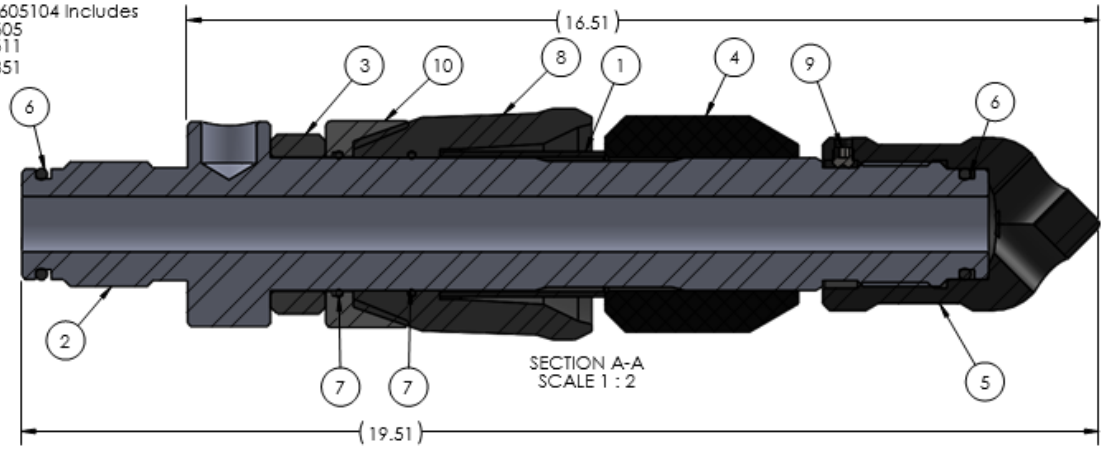

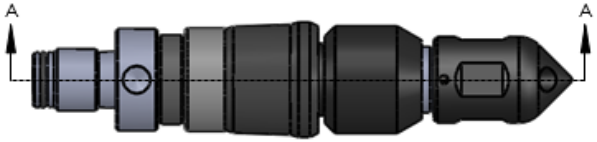

Hoist: -
Torque: -
Pressure: 10,000 PSI

CRITICAL COMPONENT: Pressure Containing Component

DO NOT SCALE FOR DIMENSIONS. ALL DIMENSIONS ARE IN INCHES. REMOVE ALL BURRS. RADIUS ALL CORNERS .005/.047. BREAK ALL SHARP EDGES .005/.020 X 45° OR .005/.020 R. DRILLED HOLES SHOULD BE ON THE PLUS SIDE OF THE TOLERANCE

DECIMAL TOLERANCES		SURFACE FINISH	CONCENTRICITY
.X = ±.032	FRACTION ± 1/32	MACHINED 250RMS	MACHINED WITH GRD CD - ID .010 TIR
.XX = ±.015	ANGULAR ± 0.50°	STRAIGHT THDS. 175RMS	ID - ID .010 TIR
.XXX = ±.005	PERPEND. ± 0.25°	TAPERED THDS. 125RMS	CD - CD .010 TIR
			AS R/MACH. .025 TIR

MATERIAL AND PROCESS SPECIFICATIONS NUMBERS ON THIS DRAWING ARE TO ALWAYS REFERENCE THE LATEST APPROVED REVISION.

GOVERNED BY DW WORKS, L.P. SCALE AND DIMENSIONS ARE NOT GUARANTEED. PROPRIETARY INFORMATION. THIS DOCUMENT MAY NOT BE COPIED OR REPRODUCED IN WHOLE OR IN PART IN ANY WAY WITHOUT THE EXPRESS WRITTEN CONSENT OF DW. THIS DOCUMENT ALSO IS AN UNPUBLISHED WORK OF DW. DW CLAIMS ALL RIGHTS TO THIS WORK AND INTENDS TO MAINTAIN THIS WORK CONFIDENTIAL AND AS A TRADE SECRET. DW MAY ALSO SEEK TO PROTECT THIS WORK BY ANY AVAILABLE LEGAL MEANS. DISCLOSING OR MAKING ACCESS TO THIS WORK MAY NOT COMPLY WITH DW'S CLAIMS THAT IN CONVERTING IN THIS WORK. UNLESS EXPRESSLY AUTHORIZED BY DW TO DO SO.

DRAWN	AM	DATE 1/13/2017
APPD.	MH	DATE 4/19/2017
REV. DWN.	JL	DATE 12/5/2017
REV. APPD.	MH	DATE 1/3/2018

Project: Circulator
Description: Circulator Assembly
Size: 4-1/2" - 6-5/8"
Part NO. 605101
REV. A 01
SHEET 1 of 4

C:\dw_vault\dw jobs\mud tools\circulator part\cad files\

Printed copy is

IF IN DOUBT, PLEASE ASK!

ITEM NO.	PART NUMBER	DESCRIPTION	Size	4.5-5 in Auto Valve/QTY.
7	603573	Shorty Auto Valve	4-1/2" - 5-1/2"	1

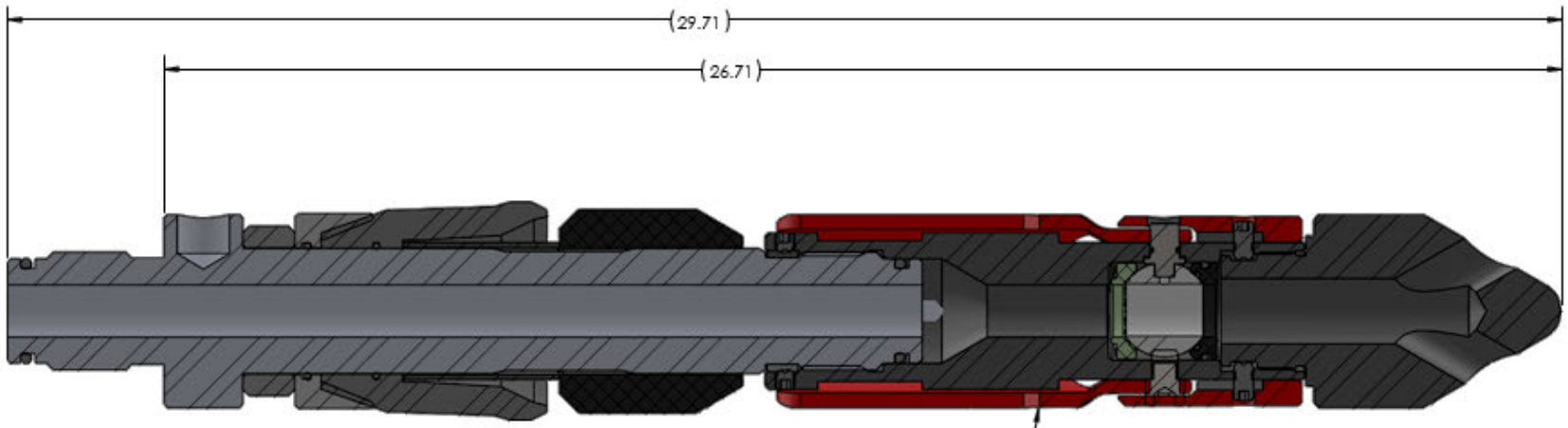

SECTION B-B
SCALE 1 : 2

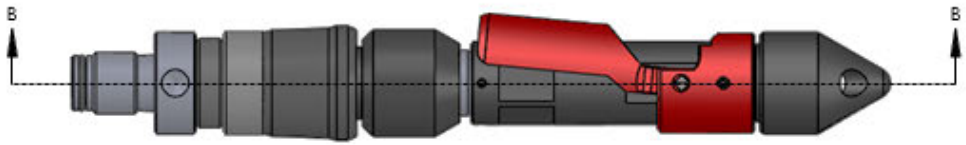

7

Shorty AutoValve can replace nose

Hoist: -

Torque: -

Pressure: 10,000 PSI

CRITICAL COMPONENT: Pressure Containing Component

Project: Circulator

Description: Circulator Assembly

Size: 4-1/2" - 6-5/8"

Part NO. 605101

REV. A 01

SHEET 2 of 4

C:\dw_vault\dw jobs\mud tools\circulator part\cad files\

Printed copy is

IF IN DOUBT...PLEASE ASK!

ITEM NO.	PART NUMBER	DESCRIPTION	Size	Toolbox Size	QTY.
1	605102	Circulator Body	4-1/2"-6-5/8"		1
2	601095	Cup Lock Spacer	5-1/2"-6-5/8"		1
3	601093	Cup Sleeve	5-1/2"-6-5/8"		1
4	601101	GageRing	5-1/2" 17-20#		1
5	605837	Nose	4-1/2"-6-5/8"		1
6	700605	O-Ring		2-325	2
7	700606	O-Ring		2-233	2
8	601112	Packer Cup	5-1/2" 17-20#		1
9	700803	Rotary Seal			1
10	701351	Set Screw		3/8-16 x 3/8	3
11	601116	Thimble	5-1/2" 14-23#		1

Other Gage Rings and Packer Cups	
605277	5-1/2" 23-26.8#
605048	6" 20# Thimlbe
605556	6-5/8 20-32# Thimble
601100	5-1/2" 13-15.5# Gage Ring
603655	5-1/2" 23# Gage Ring
601102	5-1/2" 26# Gage Ring
602717	6" 18.6# Gage Ring
605047	6" 20# Gage Ring
603940	6-5/8" 32-35# Gage Ring
601113	5-1/2" 20-23# Packer Cup
601111	5-1/2" 13-15.5# Packer Cup
603530	5-1/2" 20# Packer Cup
603531	5-1/2" 23# Packer Cup
602593	5-1/2" 26# Packer Cup
605047	6" 20# Packer Cup
603941	6-5/8" 32# Packer Cup

Seal Kit
Part # 605105 Includes
2) 700605
2) 700606
3) 701351
1) 700803

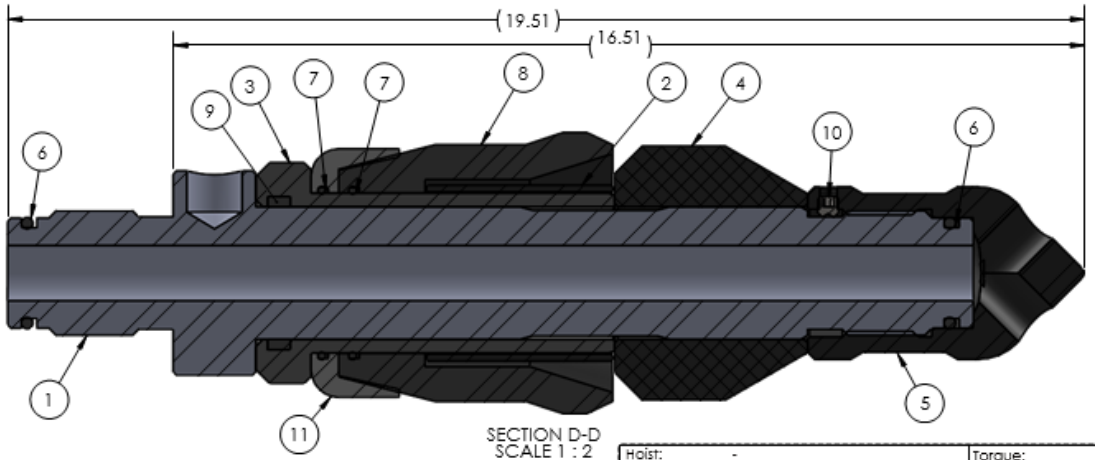

SECTION D-D
SCALE 1 : 2

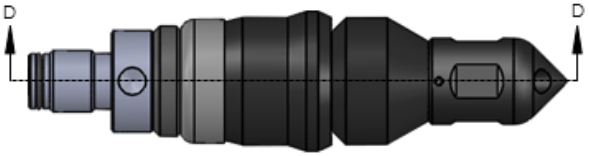

Hoist: -
Torque: -
Pressure: 10,000 PSI

CRITICAL COMPONENT: Pressure Containing Component

UNLESS OTHERWISE SPECIFIED
DO NOT SCALE FOR DIMENSIONS. ALL DIMENSIONS ARE IN INCHES. REMOVE ALL BURRS. RADIUS ALL CORNERS .005/.015. BREAK ALL SHARP EDGES .005/.030 X 45° OR .005/.030 R. DRILLED HOLES SHOULD BE ON THE PLUS SIDE OF THE TOLERANCE

DECIMAL TOLERANCES	SURFACE FINISH	CONCENTRICITY
.X = ±.032	FRACTION ± 1/32	MACHINED 250RMS
.XX = ±.015	ANGULAR ± 0.50°	STRAIGHTNDS. 175RMS
.XXX = ±.005 PERPEND. ± 0.35°	TAPERED THDS. 125RMS	

MACHINED SURFACES
OD - ID .010 TIR
ID - ID .010 TIR
OD - OD .010 TIR
AS R/MACH. .025 TIR

MATERIAL
TITLE BLOCK SPECS
1: -
2:
3:
4:

INTERPRET DRAWING PER ASME Y14.5-2009
MATERIAL AND PROCESS SPECIFICATIONS NUMBERS ON THIS DRAWING ARE TO ALWAYS REFERENCE THE LATEST APPROVED REVISION.
THIS DRAWING IS THE PROPERTY OF DRAWORKS. IT MAY NOT BE COPIED OR REPRODUCED IN WHOLE OR IN PART IN ANY WAY WITHOUT THE EXPRESS WRITTEN CONSENT OF DW. THIS DOCUMENT ALSO IS AN UNPUBLISHED WORK OF DW, DW RETAINS ALL RIGHTS TO THIS WORK AND INTENDS TO MAINTAIN THIS WORK CONFIDENTIAL AND AS A TRADE SECRET. DW MAY ALSO SEEK TO PROTECT THIS WORK IN ANY OTHER WAY PERMITTED BY LAW. ANY PERSON VIEWING ALL OR THE WORK MAY NOT COPY, USE, OR DISCLOSE THE INFORMATION IN THE WORK UNLESS EXPRESSLY AUTHORIZED BY DW TO DO SO.

DRW.	AM	DATE 1/13/2017
APPD.	MH	DATE 4/19/2017
REV. DWN.	JL	DATE 12/5/2017
REV. APPD.	MH	DATE 1/3/2018

Project: Circulator
Description: Circulator Assembly
Size: 4-1/2" - 6-5/8"
DFTSCALE 1:4 WEIGHT(LBS)
Part NO.: 605101
REV.: A
01
SHEET 3 of 4

C:\dw_vault\dw jobs\mud tools\circulator part\cad files\

Printed copy is

IF IN DOUBT, PLEASE ASK!

ITEM NO.	PART NUMBER	DESCRIPTION	Size	5.5 in Auto Valve/QTY.
7	603573	Shorty Auto Valve	4-1/2" - 5-1/2"	1

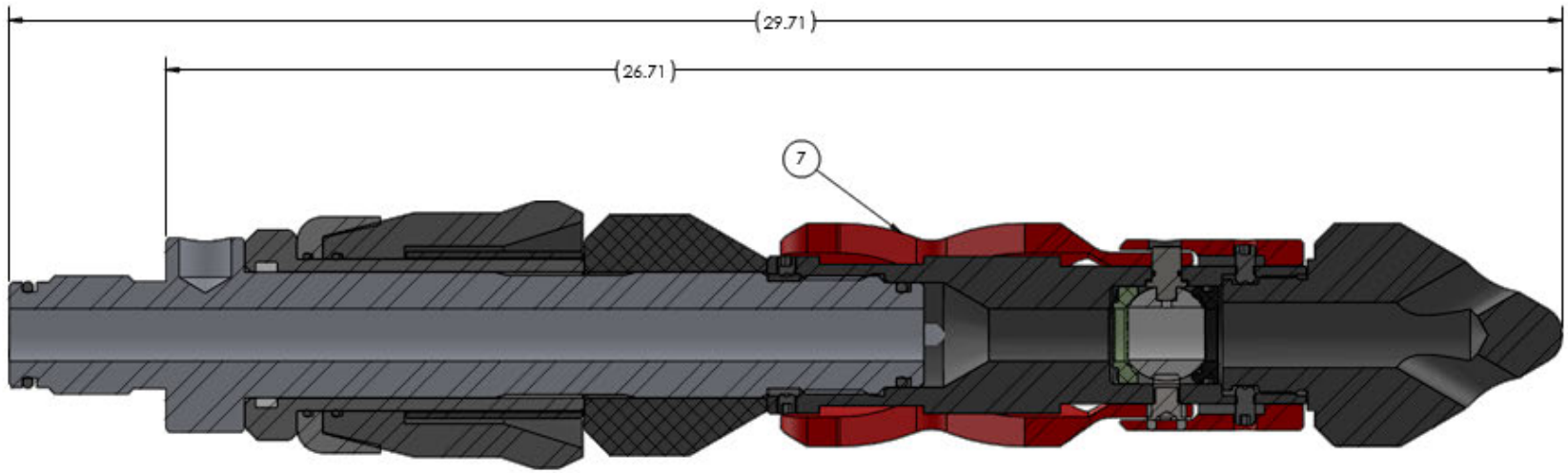

SECTION E-E
SCALE 1 : 2

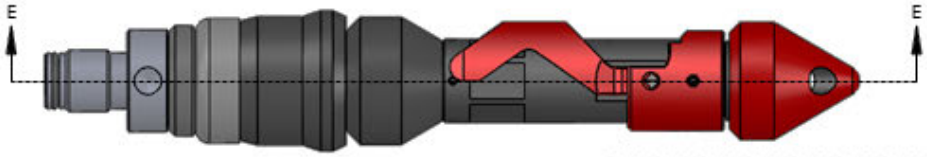

Hoist: -

Torque: -

Pressure: 10,000 PSI

CRITICAL COMPONENT: Pressure Containing Component

DO NOT SCALE FOR DIMENSIONS. ALL DIMENSIONS ARE IN INCHES. REMOVE ALL BURRS. RADIUS ALL CORNERS .020±.010. BREAK ALL SHARP EDGES .005/.020 X 45° OR .005/.020 R. DRILLED HOLES SHOULD BE ON THE PLUS SIDE OF THE TOLERANCE

DECIMAL TOLERANCES		SURFACE FINISH	CONCENTRICITY
.X = ±.030	FRACTION ± 1/32	MACHINED 250RMS	
.XX = ±.015	ANGULAR ± 0.50°	STRAIGHTTHDS. 175RMS	ID - ID .010 TIR
.XXX = ±.005 PERPEND. ± 0.25°		TAPERED THDS. 125RMS	OD - OD .010 TIR

MATERIAL AND PROCESS SPECIFICATIONS MUST BE ON THIS DRAWING AND IS ALWAYS REFERENCE THE LATEST APPROVED REVISION.

COPYRIGHT 2015 DW RAW WORKS LLP. ALL RIGHTS RESERVED. THIS DRAWING IS THE PROPERTY OF DW RAW WORKS LLP AND MAY NOT BE COPIED OR REPRODUCED IN WHOLE OR IN PART IN ANY WAY WITHOUT THE EXPRESS WRITTEN CONSENT OF DW. THE DRAWING AND ANY UNPUBLISHED WORK OF DW, DW GIVING ALL RIGHTS TO THE WORK AND INTENDS TO MAINTAIN THE WORK CONFIDENTIAL AND AS A TRADESECRET. DW MAY ALSO SEEK TO PROTECT THE WORK AS AN UNPUBLISHED COPYRIGHT. THIS DRAWING ACCESS TO THE WORK MAY NOT COPY, USE, OR DISCLOSE THE INFORMATION IN THE WORK UNLESS EXPRESSLY AUTHORIZED BY DW IN TO DO SO.

DRAWN: AM DATE 1/13/2017
APPD.: MM DATE 4/19/2017
REV. DRWN. JL DATE 12/5/2017
REV. APPD. MM DATE 1/3/2018

Project: Circulator
Description: Circulator Assembly
Size: 4-1/2" - 6-5/8"
Part NO. 605101
REV. A 01
SHEET 4 of 4

C:\dw_vault\dw jobs\mud tools\circulator part\cad files\

Printed copy is

10.8.2 Internal Circulators, 7” – 7-5/8”

IF IN DOUBT...PLEASE ASK!

ITEM NO.	PART NUMBER	DESCRIPTION	Toolbox Size	Size	QTY.
1	605072	Circulator Body		7" 7-5/8"	1
2	605000	Thimble		7"	1
3	605001	Packer Cup		7" 17/23#	1
4	605074	Gage Ring		7" 17-23#	1
5	605080	Cup Spacer		7"-7-5/8" 4"ID	1
6	605441	Nose		7"-20"	1
7	700612	O-Ring	2-242		2
8	700601	O-Ring	2-334		2
9	701350	Set Screw	3/8-16 x 1/2		3

Other Thimble, Gage Rings, and Packer Cup Sizes	
605009	7-5/8" Thimble
605002	7" 22-26# Packer Cup
605003	7" 29-32# Packer Cup
605012	7" 35# Packer Cup
605010	7-5/8" 24-29.7 Packer Cup
605011	7-5/8" 33.7-42.8# Packer Cup
605075	7" 23-26# Gage Ring
605076	7" 29-32# Gage Ring
605077	7" 35# Gage Ring
605078	7-5/8" 24-29.7# Gage Ring
605079	7-5/8" 33.7-42.8# Gage Ring

Seal Kit
Part # 605149
Includes:
3) 701350
2) 700612
2) 700601

7" Configuration Shown

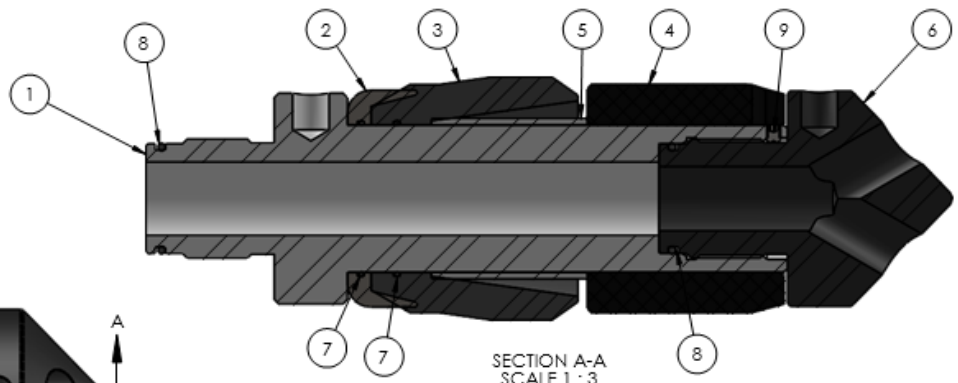

SECTION A-A
SCALE 1 : 3
7" Configuration Shown

Hoist: -
Torque: -
Pressure: 10,000 PSI

CRITICAL COMPONENT: Pressure Containing Component

DRAW DIMENSIONS SPECIFIED
DO NOT SCALE FOR DIMENSIONS. ALL DIMENSIONS ARE IN INCHES. REMOVE ALL BURRS. RADIUS ALL CORNERS .005/.047. BREAK ALL SHARP EDGES .005/.030 X 45° OR .005/.030 R. DRILLED HOLES SHOULD BE ON THE PLUS SIDE OF THE TOLERANCE

DECIMAL TOLERANCES: .X = ±.033; .XX = ±.015; .XXX = ±.005 PERPEND. ± 0.25°
FRACTION ± 1/32; ANGULAR ± 0.50°
SURFACE FINISH: MACHINED 250RMS; STRAIGHT THDS. 175RMS; TAPERED THDS. 125RMS
CONCENTRICITY: OD - ID .010 TIR; ID - ID .010 TIR; OD - OD .010 TIR; AS RUN/MACH. .0025 TIR

MATERIALS:
TITLE BLOCK SPECS:
1: -
2:
3:
4:

INTERPRET DRAWING PER ASME Y14.5-2009
MATERIAL AND PROCESS SPECIFICATION NUMBERS ON THIS DRAWING ARE TO ALWAYS REFERENCE THE LATEST APPROVED REVISION.
THIS DRAWING IS COMPLETE AS SHOWN. ALL DIMENSIONS, NOTES, AND SPECIFICATIONS ARE PART OF THE DESIGN. DO NOT SCALE DRAWING FOR DIMENSIONS.
THIS DRAWING IS THE PROPERTY OF DW FLOW WORKS, INC. AND MAY NOT BE COPIED OR REPRODUCED IN WHOLE OR IN PART IN ANY WAY WITHOUT THE EXPRESS WRITTEN CONSENT OF DW FLOW WORKS, INC. THIS DOCUMENT ALSO IS AN UNPUBLISHED WORK OF DW FLOW WORKS, INC. ALL RIGHTS TO THIS WORK AND INTENDED TO MAINTAIN THIS WORK CONFIDENTIAL AND AS A TRADE SECRET. DW FLOW WORKS, INC. ALSO SEEKS TO PROTECT THIS WORK AS AN ONGOING BUSINESS ENTERPRISE. THIS WORK MAY NOT BE COPIED, USED, OR DISCLOSED TO ANY PERSON OR ENTITY FOR ANY PURPOSE UNLESS EXPRESSLY AUTHORIZED BY DW FLOW WORKS, INC.

DRAWN: AM — DATE 1/16/2017
APPD.: MH — DATE 4/13/2017
REV. DRWN. — DATE
REV. APPD. — DATE

Project: Circulator
Description: Circulator Assembly
Size: 7" 7-5/8"
DRAWING SCALE: 1:6 (1:3)
Part NO.: 605071
REV.: - 01
SHEET 1 of 2

C:\dw_vault\dw jobs\mud tools\circulator part\cad files\

Printed copy is

IF IN DOUBT...PLEASE ASK!

ITEM NO.	PART NUMBER	DESCRIPTION	Toolbox Size	QTY.
1	604308	Shorty AutoValve		1
2	605082	AutoValve Adapter		1
8	700613	O-Ring	2-327	1

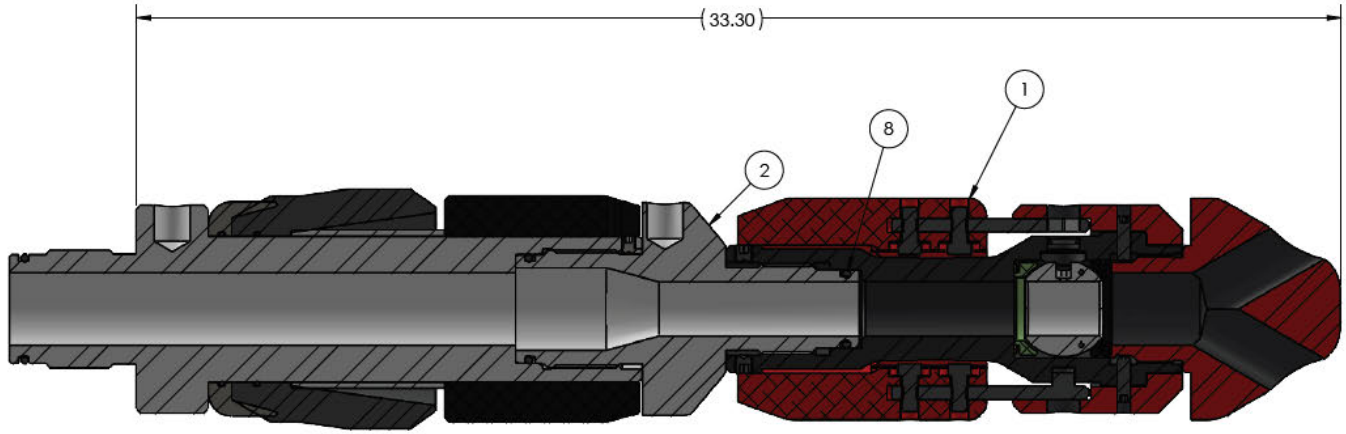

SECTION C-C
SCALE 1 : 3

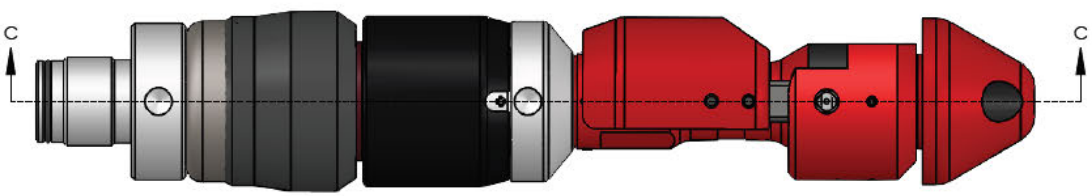

Hoist: -
Torque: -
Pressure: 10,000 PSI

CRITICAL COMPONENT: Pressure Containing Component

UNLESS OTHERWISE SPECIFIED
DO NOT SCALE FOR DIMENSIONS. ALL DIMENSIONS ARE IN INCHES. REMOVE ALL BURRS. RADIUS ALL CORNERS .025/.047. BREAK ALL SHARP EDGES .005/.030 X 45° OR .005/.020 R DRILLED HOLES SHOULD BE ON THE PLUS SIDE OF THE TOLERANCE

DECIMAL TOLERANCES		SURFACE FINISH	CONCENTRICITY
.X = ±.032	FRACTION ± 1/32	MACHINED 250RMS	MACHINED SURFACES OD - ID .010 TIR
.XX = ±.015	ANGULAR ± 0.50°	STRAIGHT THDS. 175RMS	ID - ID .010 TIR
.XXX = ±.005	PERPEND. ± 0.25°	TAPERED THDS. 125RMS	OD - OD .010 TIR
			AS R /MACH. .025 TIR

MATERIAL
PROCESS SPECS.
1: -
2:
3:
4:

INTERPRET DRAWING PER ASME Y14.5-2009
MATERIAL AND PROCESS SPECIFICATIONS NUMBERS ON THIS DRAWING ARE TO ALWAYS REFERENCE THE LATEST APPROVED REVISION.

©2018 BY DRAWWORKS L.P. - BOLING DEVELOPMENT GENERAL PARTNER
THIS DOCUMENT IS CONFIDENTIAL AND IS THE PROPERTY OF DRAWWORKS L.P. (DW) IT MAY NOT BE COPIED OR REPRODUCED IN WHOLE OR IN PART IN ANY WAY WITHOUT THE EXPRESS WRITTEN CONSENT OF DW. THIS DOCUMENT ALSO IS AN UNPUBLISHED WORK OF DW. DW OWNS ALL RIGHTS TO THIS WORK AND INTENDS TO MAINTAIN THIS WORK CONFIDENTIAL AND AS A TRADE SECRET. DW MAY ALSO SEEK TO PROTECT THIS WORK AS AN UNPUBLISHED COPYRIGHT. THOSE HAVING ACCESS TO THE WORK MAY NOT COPY, USE, OR DISCLOSE THE INFORMATION IN THIS WORK UNLESS EXPRESSLY AUTHORIZED BY DW TO DO SO.

DWN.	AM	DATE 1/16/2017
APPD.	MH	DATE 4/13/2017
REV. DWN.		DATE
REV. APPD.		DATE

Project: Circulator
Description: Circulator Assembly
Size: 7" 7-5/8"
DFT SCALE 1:4 WEIGHT(LBS)
Part NO. 605071
REV. - 01
SHEET 2 of 2

C:\dw_vault\dw jobs\mud tools\circulator part\cad files\

Printed copy is **UNCONTROLLED**

10.8.3 Internal Circulators, 8-5/8" – 13-3/8"

IF IN DOUBT...PLEASE ASK!

ITEM NO.	PART NUMBER	DESCRIPTION	Toolbox Size	QTY.
1	600070	Cup Spacer		1
2	605091	Circulator Body		1
3	605092	GageRing		1
4	605441	Nose		1
5	700601	O-Ring	2-334	2
6	700005	O-Ring	2-349	2
7	600288	Packer Cup		1
8	701352	Set Screw	3/8-16 x 3/4	3
9	600304	Thimble		1

Seal Kit
Part # 605098
Includes:
2) 700601
2) 700005
3) 701352

See Packer Cup and GageRing list for complete list of available components 8-5/8 - 13-5/8"

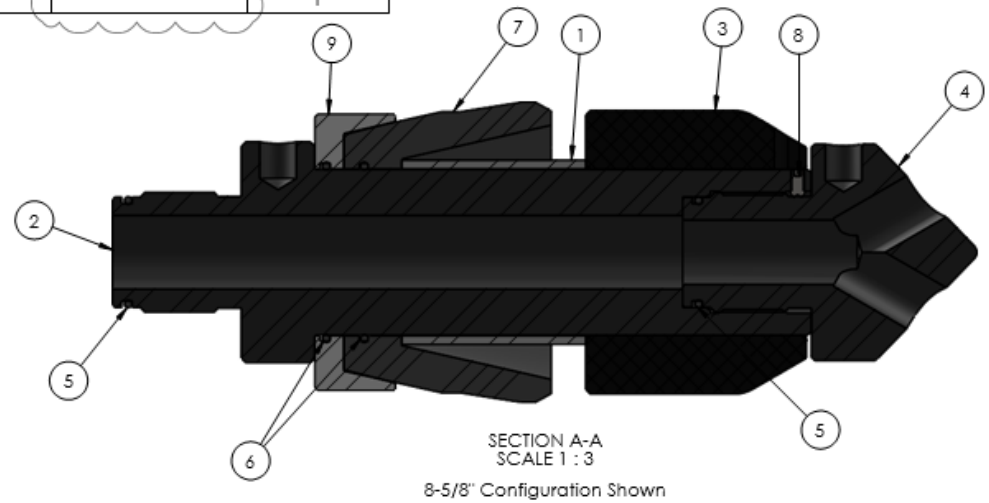

SECTION A-A
SCALE 1 : 3

8-5/8" Configuration Shown

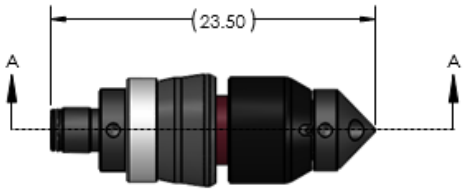

Hoist: -
Torque: -
Pressure: 10,000 PSI

CRITICAL COMPONENT: Pressure Containing Component

DRAWORKS

Project: Circulator
Description: Circulator Assembly
Size: 8-5/8" 13-3/8"

DRN. AM DATE 1/16/2017
APPD. MH DATE 04/19/2017
REV. DRN. DATE
REV. APPD. DATE

Part NO. 605090 REV. - 02 SHEET 1 of 2

C:\dw_vault\dw jobs\mud tools\circulator part\cad files\

Printed copy is

IF IN DOUBT...PLEASE ASK!

ITEM NO.	PART NUMBER	DESCRIPTION	Toolbox Size	QTY.
2	605099	AutoValve Adapter		1
5	700601	O-Ring	2-334	2
8	701352	Set Screw	3/8-16 x 3/4	3
9	604352	Shorty AutoValve		1
11	700026	O-Ring	2-335	1

Seal Kit
Part # 605280
Includes:
2)700601
1)700026
3)701352

Use Circulator Parts and Additional Parts on this page for complete Shorty AV Assembly.

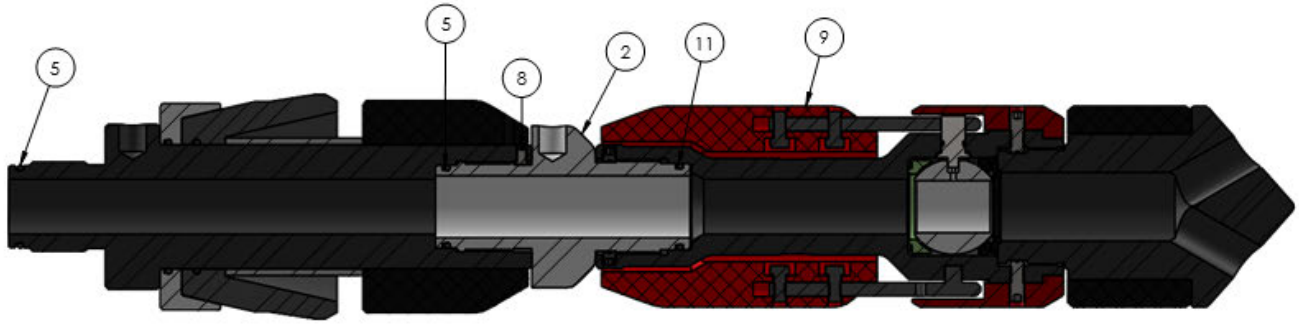

SECTION B-B
8-5/8" With AutoValve Shown

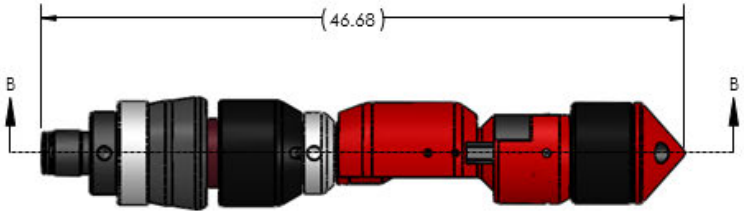

8-5/8"-9-5/8" Length Shown

Hoist: -
Torque: -
Pressure: 10,000 PSI

CRITICAL COMPONENT: Pressure Containing Component

DO NOT SCALE FOR DIMENSIONS. ALL DIMENSIONS ARE IN INCHES. REMOVE ALL BURRS. RADIUS ALL CORNERS .020/.047. BREAK ALL SHARP EDGES .005/.020 X 45° OR .005/.020 R. DRILLED HOLES SHOULD BE ON THE PLUS SIDE OF THE TOLERANCE

DECIMAL TOLERANCES		SURFACE FINISH	CONCENTRICITY
.X = ±.032	FRACTION ± 1/32	MACHINED 250RMS	VISUAL AND WITH DIAL CO - ID .010 TIR
.XX = ±.015	ANGULAR ± 0.50°	STRAIGHT THDS. 175RMS	ID - ID .010 TIR
.XXX = ±.005 PERPEND. ± 0.25°		TAPERED THDS. 125RMS	OD - OD .010 TIR
			AS R.W.MACH. .028 TIR

MATERIAL
TYP 2.331 (TYP 2)
1:
2:
3:
4:

INTERPRET DRAWING PER ASME Y14.5-2009
MATERIAL AND PROCESS SPECIFICATIONS NUMBERS ON THIS DRAWING ARE TO ALWAYS REFERENCE THE LATEST APPROVED REVISION.

PROPRIETARY INFORMATION: THIS DOCUMENT IS THE PROPERTY OF DW WORKS AND ITS GENERAL PARTNERS. It cannot be copied or reproduced in whole or in part in any way without the express written consent of DW. This document and its an unpublished work of DW. DW owns all rights to this work and intends to maintain this work confidential and as a trade secret. DW may also seek to protect this work as an unpublished copyright. Inadvertent access to this work may not confer use or ownership rights unless expressly authorized by DW to do so.

DRAWN: JL DATE 04/17/2017
APPD: MH DATE 04/19/2017
REV. DWN. DATE
REV. APPD. DATE

Project: Circulator
Description: Circulator Assembly
Size: 8-5/8" 13-3/8"
DFTSCALE: 1:4 WEIGHT: (lb)
Part NO. 605090
REV. - 02
SHEET 2 of 2

C:\dw_vault\dw jobs\mud tools\circulator part\cad files\

Printed copy is

10.8.4 Internal Circulators, 9-5/8” – 13-3/8”

IF IN DOUBT...PLEASE ASK!

ITEM NO.	PART NUMBER	DESCRIPTION	Size	Toolbox Size	9.625"/QTY.
1	600070	Cup Spacer	8-5/8" 20"		1
2	605472	Circulator Body	9-5/8"-13-5/8		1
3	605093	GageRing	9-5/8" 36-53.5#		1
4	605541	Nose	9-5/8"- 26"		1
5	700015	O-Ring		2-342	1
6	700601	O-Ring		2-334	1
7	700005	O-Ring		2-349	2
8	601207	Packer Cup	9-5/8" 36-47#, 9-7/8" 62.8#		1
9	701352	Set Screw		3/8-16 x 3/4	3
10	600305	Thimble	9-5/8" 36-59.4#		1

Other Size Configurations

ITEM NO.	PART NUMBER	DESCRIPTION	Size	10.75"/QTY.
3	605095	GageRing	10-3/4" 40.5-60.7#	1
8	601217	Packer Cup	10-3/4" 40.5-60.7#	1
10	600306	Thimble	10-3/4" 32-55#	1
ITEM NO.	PART NUMBER	DESCRIPTION	Size	11.75"/QTY.
3	605096	GageRing	11-3/4" 47-71# 11-7/8" 71.2#	1
8	602685	Packer Cup	11-3/4" 38-54#	1
10	600307	Thimble	11-3/4" 38-66.7# 11-7/8" 71.8#	1
ITEM NO.	PART NUMBER	DESCRIPTION	Size	13.375" 13.625"/QTY.
3	605097	GageRing	13-3/8" 54.5-85#	1
8	601212	Packer Cup	13-3/8" 54.5-85#, 13-5/8" 88.2#	1
10	600308	Thimble	13-3/8" 54-72#	1

See Packer Cup and Gage Ring list for complete list of available componenets 9-5/8"-13-3/8"

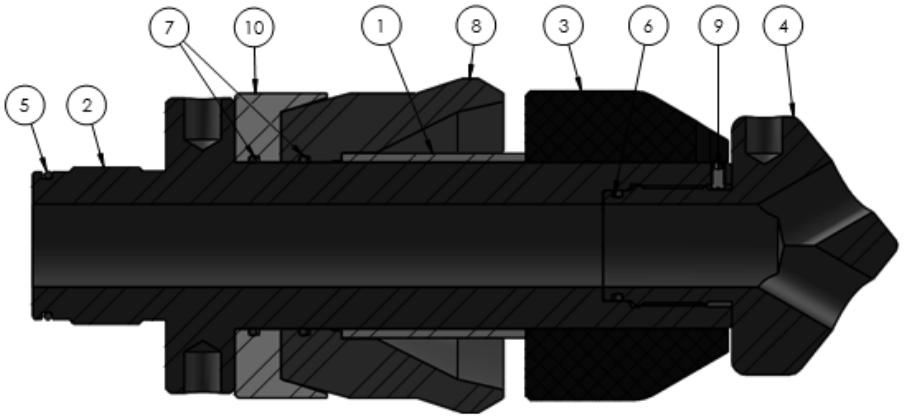

9-5/8" Configuration Shown

SECTION A-A
SCALE 1 : 3

PART NUMBER	DESCRIPTION	605678 Redress Kit/QTY.
700015	O-Ring	1
700601	O-Ring	1
700005	O-Ring	2
701352	Set Screw	3

CRITICAL COMPONENT:

UNLESS OTHERWISE SPECIFIED

DO NOT SCALE FOR DIMENSIONS. ALL DIMENSIONS ARE IN INCHES. REMOVE ALL BURRS. RADIUS ALL CORNERS .005/.010. BREAK ALL SHARP EDGES .005/.030 X 45° OR .005/.030 R. DRILLED HOLES SHOULD BE ON THE PLUS SIDE OF THE TOLERANCE

DECIMAL TOLERANCES		SURFACE FINISH	CONCENTRICITY
.X = ±.032	FRACTION ± 1/32	MACHINED 250RMS	MACHINED SURFACES OD - ID .010 TIR
.XX = ±.015	ANGULAR ± 0.50°	STRAIGHT THDS. 175RMS	ID - ID .010 TIR
.XXX = ±.005	PERPEND. ± 0.25°	TAPERED THDS. 125RMS	OD - OD .010 TIR
			AS R/MACH. .005 TIR

MATERIAL:

FINISH INFO:
1: -
2:
3:
4:

INTERPRET DRAWING PER ASME Y14.5-2009
MATERIAL AND PROCESS SPECIFICATIONS NUMBERS ON THIS DRAWING ARE TO ALWAYS REFERENCE THE LATEST APPROVED REVISION.
PROPRIETARY DRAWING. THIS DRAWING IS THE PROPERTY OF DW FLOW DRILLING SERVICES, A PARTNER.
THIS DOCUMENT IS CONFIDENTIAL AND IS THE PROPERTY OF DW FLOW DRILLING SERVICES. THIS DOCUMENT MAY NOT BE COPIED OR REPRODUCED IN WHOLE OR IN PART IN ANY WAY WITHOUT THE EXPRESS WRITTEN CONSENT OF DW. THIS DOCUMENT AUDIO AN UNPUBLISHED WORK OF DW. DW OWNS ALL RIGHTS TO THIS WORK AND INTENDS TO MAINTAIN THIS WORK CONFIDENTIAL AND AS A TRADE SECRET. DW MAY ALSO SEEK TO PROTECT THIS WORK AS AN UNPUBLISHED COPYRIGHT. THOSE HAVING ACCESS TO THIS WORK MAY NOT COPY, USE, OR DISCLOSE THE INFORMATION IN THIS WORK UNLESS EXPRESSLY AUTHORIZED BY DW TO DO SO.

DRAWORKS

DWN. JL	DATE 02/27/2017	
APPD. MH	DATE 07/27/2018	
REV. DWN.	DATE	
REV. APPD.	DATE	

Project: Circulator
Description: Circulator Assembly
Size: 9-5/8"-13-3/8"
DFT SCALE: 1:4 WEIGHT: (LB)
Part NO. 605494
REV. - -
SHEET 1 of 2

C:\dw_vault\dw jobs\mud tools\circulator part\cad files\

Printed copy is

IF IN DOUBT...PLEASE ASK!

ITEM NO.	PART NUMBER	DESCRIPTION	Toolbox Size	Autovalve/QTY.
2	605099	AutoValve Adapter		1
5	700015	O-Ring	2-342	1
6	700601	O-Ring	2-334	1
8	700026	O-Ring	2-335	1
10	701352	Set Screw	3/8-16 x 3/4	3
11	604352	Shorty AutoValve		1

PART NUMBER	DESCRIPTION	605599 Redress Kit/QTY.
700015	O-Ring	1
700601	O-Ring	1
700026	O-Ring	1
701352	Set Screw	3

Use Circulator Parts and Additional Parts
on this page to complete Shorty AV Assembly

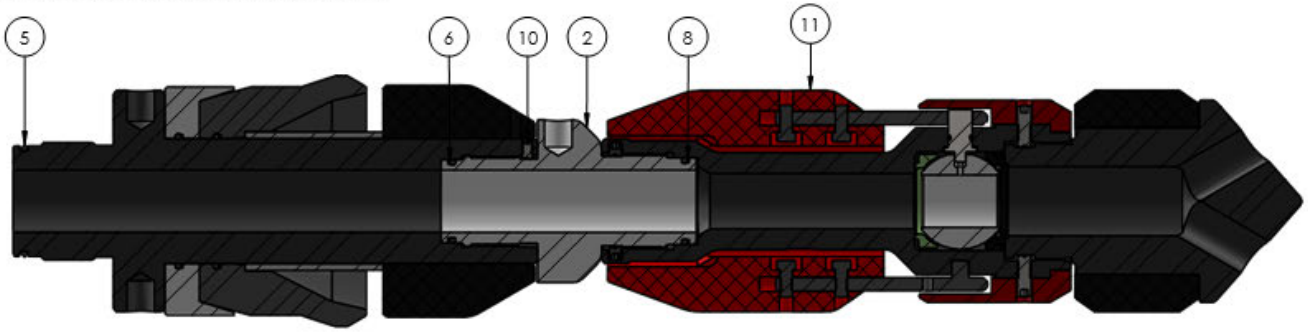

SECTION B-B

9-5/8" With AutoValve Shown

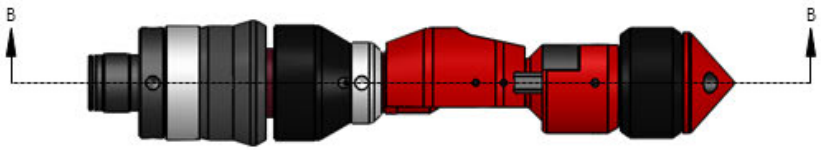

CRITICAL COMPONENT:

UNLESS OTHERWISE SPECIFIED

DO NOT SCALE FOR DIMENSIONS. ALL DIMENSIONS ARE IN INCHES. REMOVE ALL BURRS. RADIUS ALL CORNERS .005/.010. BREAK ALL SHARP EDGES .005/.030 X 45° OR .005/.030 R. DRILLED HOLES SHOULD BE ON THE PLUS SIDE OF THE TOLERANCE

DECIMAL TOLERANCES		SURFACE FINISH	CONCENTRICITY
.X = ±.033	FRACTION ± 1/32	MACHINED 250RMS	MACHINED SURFACES OD - ID .010 TIR
.XX = ±.015	ANGULAR ± 0.50°	STRAIGHT THDS. 175RMS	ID - ID .010 TIR
.XXX = ±.005	PERPEND. ± 0.25°	TAPERED THDS. 125RMS	OD - OD .010 TIR
		AS R/MACH. .025 TIR	

MATERIAL

PROCESS SPECS

1: -
2:
3:
4:

INTERPRET DRAWING PER ASME Y14.5-2009
MATERIAL AND PROCESS SPECIFICATIONS NUMBERS ON THIS DRAWING ARE TO ALWAYS REFERENCE THE LATEST APPROVED REVISION.

© 2013 DRAWORKS LLC. THIS DOCUMENT IS COPYRIGHTED AND THE PROPERTY OF DRAWORKS LLC AND/OR ITS SUBSIDIARIES AND/OR PARTNERS. THIS DOCUMENT MAY NOT BE COPIED OR REPRODUCED IN WHOLE OR IN PART IN ANY WAY WITHOUT THE EXPRESS WRITTEN CONSENT OF DW. THIS DOCUMENT AUDITS AN UNPUBLISHED WORK OF DW. DW OWNS ALL RIGHTS TO THIS WORK AND INTENDS TO MAINTAIN THIS WORK CONFIDENTIAL AND AS A TRADE SECRET. DW MAY ALSO SEEK TO PROTECT THIS WORK AS AN UNPUBLISHED COPYRIGHT. THOSE HAVING ACCESS TO THIS WORK MAY NOT COPY, USE, OR DISCLOSE THE INFORMATION CONTAINED IN THIS WORK UNLESS EXPRESSLY AUTHORIZED BY DW TO DO SO.

DRAWORKS

DWN. JL	DATE 03/10/2017	
APPD. MH	DATE 07/27/2018	
REV. DWN.	DATE	
REV. APPD.	DATE	

Project: Circulator

Description: Circulator Assembly

Size: 9-5/8"-13-3/8"

DFTSCALE: 1:4 WEIGHT(LBS):

Part NO. 605494

REV. - -

SHEET 2 of 2

C:\dw_vault\dw jobs\mud tools\circulator part\cad files\

Printed copy is

10.8.5 Internal Circulators, 16” – 20”

IF IN DOUBT...PLEASE ASK!

ITEM NO.	PART NUMBER	DESCRIPTION	Size	Toolbox Size	16"/QTY.
1	600070	Cup Spacer	8-5/8" 20"		1
2	605475	Circulator Body	16"-20"		1
3	602439	GageRing	16" 65-75#		1
4	605441	Nose	7"-20"		1
5	700601	O-Ring		2-334	2
6	700005	O-Ring		2-349	1
7	602282	Packer Cup	16" 128#		1
8	701350	Set Screw		3/8-16 x 1/2	3

See Packer Cup and Gage Ring list for complete list of avaialbe componenets 16"-20".

Seal Kit
Part # 605098
Includes:
2) 700601
2) 700005
3) 701350

ITEM NO.	PART NUMBER	DESCRIPTION	Size	18.625"/QTY.
3	600634	GageRing	18-5/8" 87.5-106#	1
8	601210	Packer Cup	18-5/8" 87.5-106#	1

ITEM NO.	PART NUMBER	DESCRIPTION	Size	20"/QTY.
3	600259	GageRing	20" 94-106.5#	1
8	601211	Packer Cup	20" 94-106.5#	1

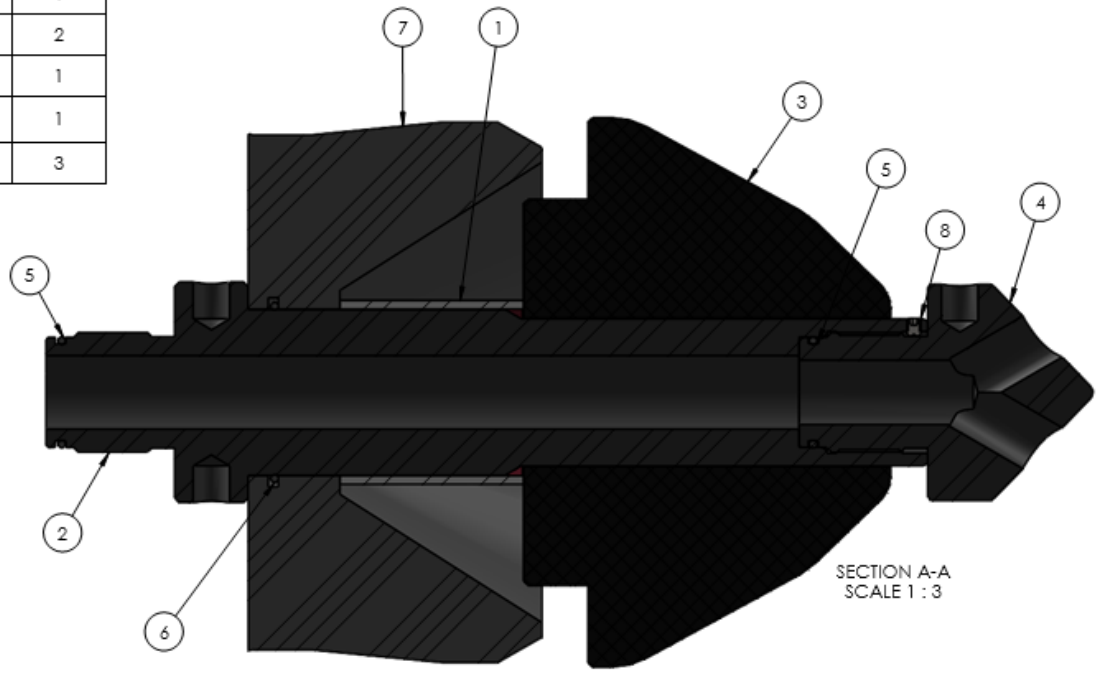

SECTION A-A
SCALE 1 : 3

Hoist: -
Torque: -
Pressure: 10,000 PSI
CRITICAL COMPONENT:
UNLESS OTHERWISE SPECIFIED
DO NOT SCALE FOR DIMENSIONS. ALL DIMENSIONS ARE IN INCHES. REMOVE ALL BURRS. RADIUS ALL CORNERS .005/.015. BREAK ALL SHARP EDGES .005/.030 X 45° OR .005/.030 R. DRILLED HOLES SHOULD BE ON THE PLUS SIDE OF THE TOLERANCE
DECIMAL TOLERANCES: .X = ±.032; .XX = ±.015; .XXX = ±.005
FRACTION ± 1/32; ANGULAR ± 0.50°; PERPEND. ± 0.25°
SURFACE FINISH: MACHINED 250RMS; STRAIGHT THDS. 175RMS; TAPERED THDS. 125RMS
CONCENTRICITY: MACHINED SURFACES OD - ID .010 TIR; ID - ID .010 TIR; OD - OD .010 TIR; AS R/MACH. .005 TIR
MATERIAL
HEAT TREATMENT
1: -
2:
3:
4:
INTERPRET DRAWING PER ASME Y14.5-2009
MATERIAL AND PROCESS SPECIFICATIONS NUMBERS ON THIS DRAWING ARE TO ALWAYS REFERENCE THE LATEST APPROVED REVISION.
PROPRIETARY & CONFIDENTIAL: THIS DRAWING IS THE PROPERTY OF DW FLOWORKS, LLC. THIS DRAWING MAY NOT BE COPIED OR REPRODUCED IN WHOLE OR IN PART IN ANY WAY WITHOUT THE EXPRESS WRITTEN CONSENT OF DW. THIS DOCUMENT AUDITS AN UNPUBLISHED WORK OF DW. DW OWNS ALL RIGHTS TO THIS WORK AND INTENDS TO MAINTAIN THIS WORK CONFIDENTIAL AND AS A TRADE SECRET. DW MAY ALSO SEEK TO PROTECT THIS WORK AS AN UNPUBLISHED COPYRIGHT. "Copyright © 2017 DW FLOWORKS, LLC" UNLESS OTHERWISE NOTED IN THIS WORK. UNLESS EXPRESSLY AUTHORIZED BY DW TO DO SO.

DRAWN BY DRAWINGS: L. F. SCHLINE DRAWN FOR DW FLOWORKS, LLC PARTNERS

DRAWN	MH	DATE 3/1/2017
APPD.	MH	DATE 5/9/2017
REV. DRWN.		DATE
REV. APPD.		DATE

Project: Circulator
Description: Circulator Assembly
Size: 16" 20"
DFT SCALE: 1:2 WEIGHT: (LB)
Part NO: 605351
REV: - 01
SHEET 1 of 1

C:\dw_vault\dw jobs\mud tools\circulator part\cad files\

Printed copy is

10.8.6 Internal Circulators, 22” – 26”

IF IN DOUBT...PLEASE ASK!

ITEM NO.	PART NUMBER	DESCRIPTION	Size	Toolbox Size	22"/QTY.
1	605551	Circulator Body	22"-26"		1
2	605545	Cup Spacer	20-22"		1
3	605542	GageRing	22" 170-224#		1
4	605541	Nose	9-5/8"- 26"		1
5	700015	O-Ring		2-342	1
6	700005	O-Ring		2-349	1
7	700601	O-Ring		2-334	1
8	605502	Packer Cup	22" 224#		1
9	701350	Set Screw		3/8-16 x 1/2	3

ITEM NO.	PART NUMBER	DESCRIPTION	Size	24"/QTY.
3	605543	GageRing	24" 171-216#	1
8	605503	Packer Cup	24" 175#	1
ITEM NO.	PART NUMBER	DESCRIPTION	Size	26"/QTY.
3	605544	GageRing	26" 202-275#	1
8	605504	Packer Cup	26" 202.4#	1

ITEM NO.	PART NUMBER	DESCRIPTION	Size	Redress Kit/QTY.
50	605600	Redress Kit	22"-26"	1

See Packer Cup and Gage Ring List for complete list of avaiable components 22"-26"

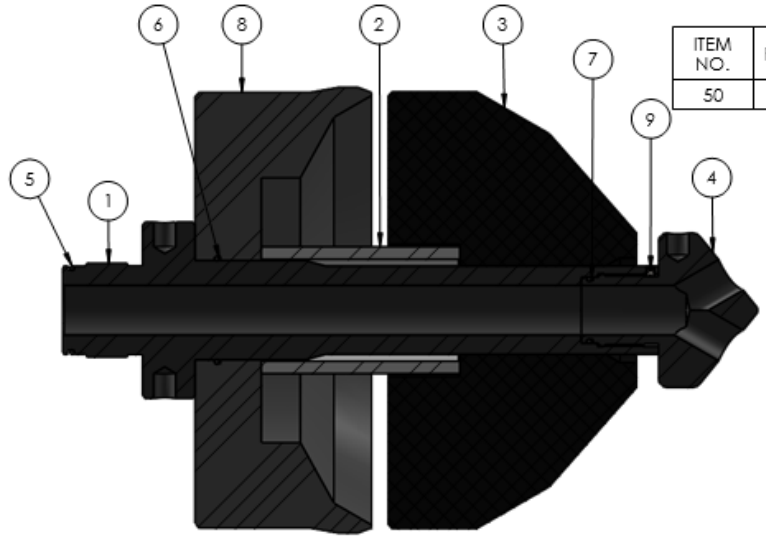

SECTION A-A
SCALE 1 : 5

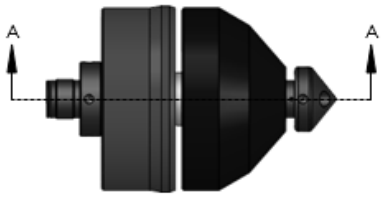

CRITICAL COMPONENT:

DRAWORKS

DWN. JL	DATE 03/09/2017	Project	Circulator
APPD. RU	DATE 10/19/2018	Description	Circulator Assembly
REV. DWN.	DATE	Size	22"-26"
REV. APPD.	DATE	Part NO. 605550	REV. - - SHEET 1 of 1

C:\dw_vault\dw jobs\mud tools\circulator part\cad files\

Printed copy is

10.9 External Circulator Assembly

IF IN DOUBT...PLEASE ASK!

ITEM NO.	PART NUMBER	DESCRIPTION	Size	Toolbox Size	4.5"/QTY.
1	700665	3/8-16x5/8" w/ 0.110" Plunger, No lock			1
2	606032	Circulator Body	4.5-7.625"		1
3	606067	Circulator Cartridge Assembly	4-1/2" - 5"		1
4	606413	Nose Cone			1
5	700106	O-Ring		2-330	1
6	700601	O-Ring		2-334	1
7	700002	Set Screw		3/8-16 x 5/8	3

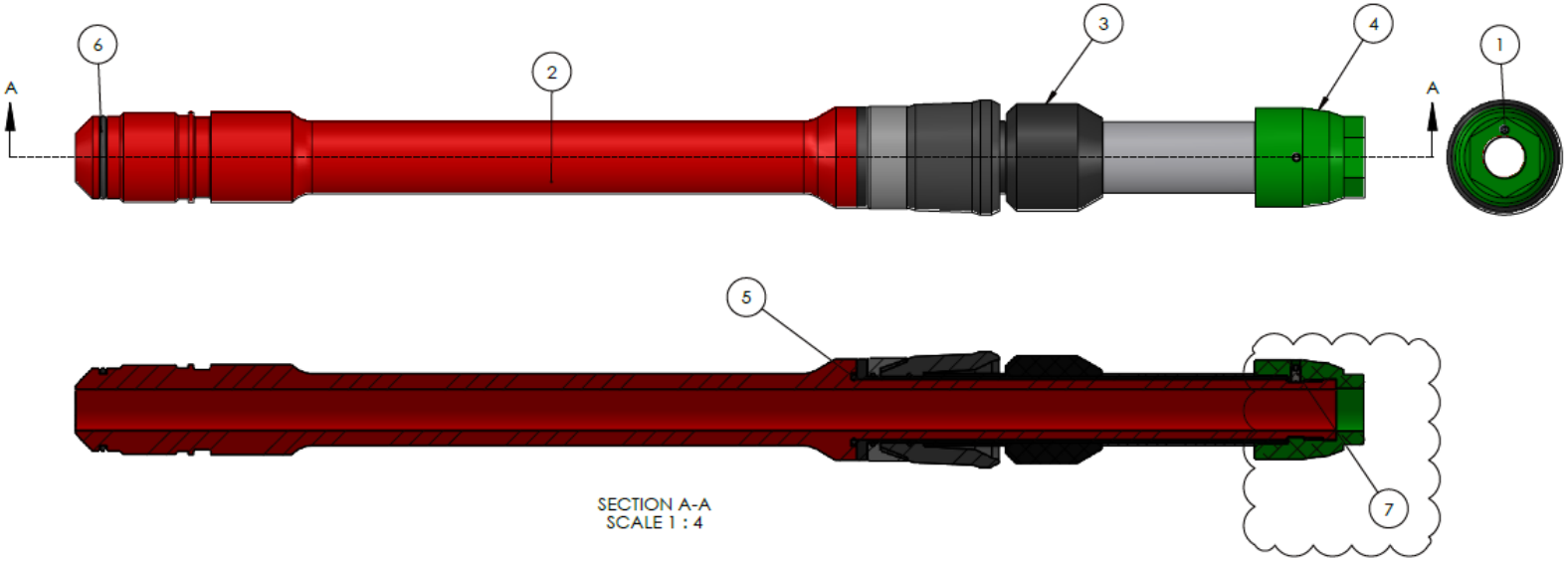

SECTION A-A
SCALE 1 : 4

Hoist: -
Torque: -
Pressure: 10,000 PSI

CRITICAL COMPONENT:

UNLESS OTHERWISE SPECIFIED
DO NOT SCALE FOR DIMENSIONS. ALL DIMENSIONS ARE IN INCHES. REMOVE ALL BURRS. RADIUS ALL CORNERS .025/.047. BREAK ALL SHARP EDGES .005/.020 X 45° OR .005/.020 R DRILLED HOLES SHOULD BE ON THE PLUS SIDE OF THE TOLERANCE

DECIMAL TOLERANCES		SURFACE FINISH		CONCENTRICITY	
.X = ±.032	FRACTION ± 1/32	MACHINED	250RMS	MACHINED SURFACES OD - ID	.010 TIR
.XX = ±.015	ANGULAR ± 0.50°	STRAIGHT THDS.	175RMS	ID - ID	.010 TIR
.XXX = ±.005	PERPEND. ± 0.25°	TAPERED THDS.	125RMS	OD - OD	.010 TIR
				AS R /MACH.	.005 TIR

MATERIAL
PROCESS SPECS.
1:
2:
3:
4:

INTERPRET DRAWING PER ASME Y14.5-2009
MATERIAL AND PROCESS SPECIFICATIONS NUMBERS ON THIS DRAWING ARE TO ALWAYS REFERENCE THE LATEST APPROVED REVISION.
©2018 BY DRAWWORKS, L.P. - BOUNG DEVELOPMENT GENERAL PARTNER
THIS DOCUMENT IS CONFIDENTIAL AND IS THE PROPERTY OF DRAWWORKS, L.P. (DW). IT MAY NOT BE COPIED OR REPRODUCED IN WHOLE OR IN PART IN ANY WAY WITHOUT THE EXPRESS WRITTEN CONSENT OF DW. THIS DOCUMENT ALSO IS AN UNPUBLISHED WORK OF DW. DW OWNS ALL RIGHTS TO THIS WORK AND INTENDS TO MAINTAIN THIS WORK CONFIDENTIAL AND AS A TRADE SECRET. DW MAY ALSO SEEK TO PROTECT THIS WORK AS AN UNPUBLISHED COPYRIGHT. THOSE HAVING ACCESS TO THE WORK MAY NOT COPY, USE, OR DISCLOSE THE INFORMATION IN THIS WORK UNLESS EXPRESSLY AUTHORIZED BY DW TO DO SO.

DRAWORKS

DWN.	TF	DATE	4/5/2018
APPD.	-	DATE	
REV. DWN.	TF	DATE	01/21/2019
REV. APPD.	-	DATE	-

Project: DWCRT External
Description: Circulator Assembly External
Size: 4-1/2"-7-5/8"
DFT SCALE 1:8 WEIGHT(LBS)
Part NO. 606188
REV. PT04 -
SHEET 1 of 2

C:\dw_vault\dw jobs\handling tools\dw0003\dw0003.2\cad files\

Printed copy is **UNCONTROLLED**

IF IN DOUBT...PLEASE ASK!

ITEM NO.	PART NUMBER	DESCRIPTION	Size	Toolbox Size	QTY.
3	606069	Circulator Cartridge Assembly	5-1/2" - 6-5/8"		1
6	700106	O-Ring		2-330	1

ITEM NO.	PART NUMBER	DESCRIPTION	Size	Toolbox Size	QTY.
3	606071	Circulator Cartridge Assembly	7" - 7-5/8"		1
6	700106	O-Ring		2-330	1

ITEM NO.	PART NUMBER	DESCRIPTION	Rebuild Kit/QTY.	Redress Kit/QTY.
1	700665	3/8-16x5/8" w/ 0.110" Plunger, No lock	1	-
2	700601	O-Ring	1	1
3	700106	O-Ring	1	1

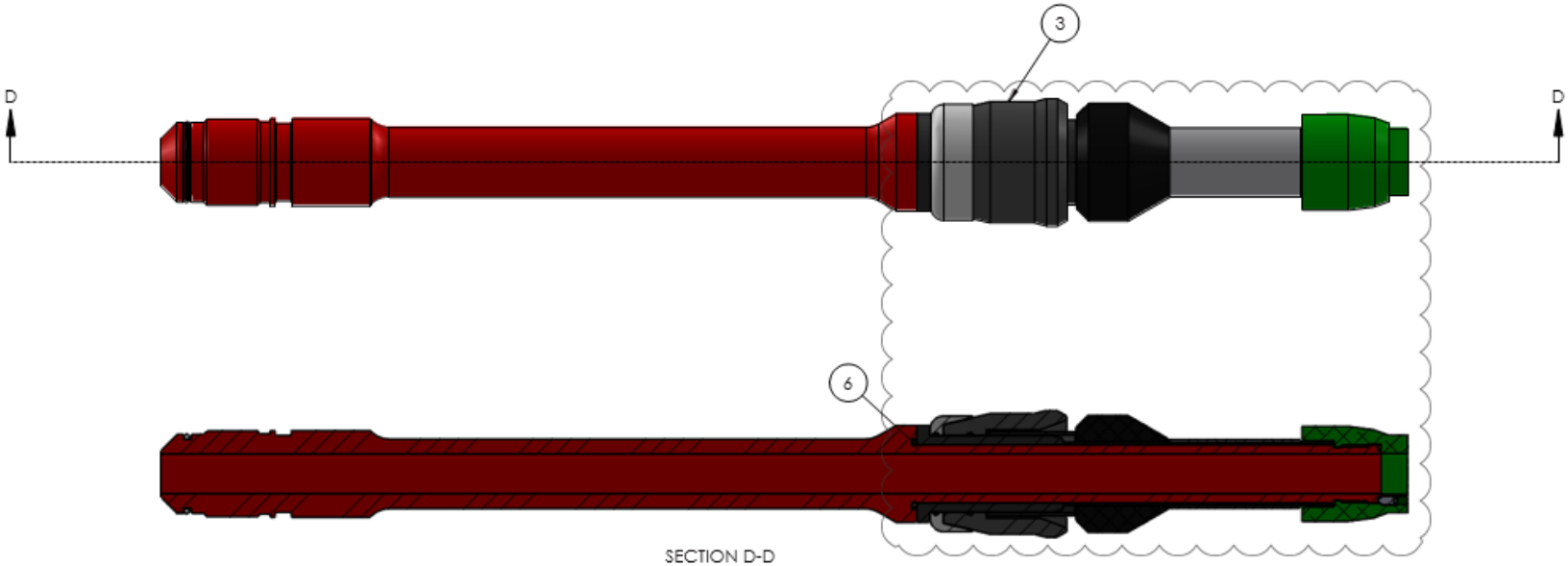

SECTION D-D
SCALE 1 : 4

Hoist: -

Torque: -

Pressure: 10,000 PSI

CRITICAL COMPONENT:

DO NOT SCALE FOR DIMENSIONS. ALL DIMENSIONS ARE IN INCHES. REMOVE ALL BURRS. RADIUS ALL CORNERS .005/.015 BREAK ALL SHARP EDGES .005/.030 X 45° OR .005/.030 R DRILLED HOLES SHOULD BE ON THE PLUS SIDE OF THE TOLERANCE

DECIMAL TOLERANCES		SURFACE FINISH	CONCENTRICITY
.X = ±.033	FRACTION ± 1/32	MACHINED 250RMS	MACHINED SURFACES CO - ID .010 TIR
.XX = ±.015	ANGULAR ± 0.50°	STRAIGHT THDS. 175RMS	ID - ID .010 TIR
.XXX = ±.005	PERPEND. ± 0.25°	TAPERED THDS. 125RMS	CO - CO .010TIR
			AS R/MACH. .025 TIR

DRAWING

PRODUCT EFFECT
1:
2:
3:
4:

INTERPRET DRAWING PER ASME Y14.5-2009
MATERIAL AND PROCESS SPECIFICATIONS NUMBERS ON THIS DRAWING ARE TO ALWAYS REFERENCE THE LATEST APPROVED REVISION.
GRID BOX DIMENSIONS ARE NOMINAL. SCALE DRAWING FOR DIMENSIONS OF GENERAL FEATURES.

THIS DOCUMENT IS CONFIDENTIAL AND PROPRIETARY TO DW DRAWORKS. IT MAY NOT BE COPIED OR REPRODUCED IN WHOLE OR IN PART IN ANY WAY WITHOUT THE EXPRESS WRITTEN CONSENT OF DW. THIS DOCUMENT AUGES AN UNPUBLISHED WORK OF DW. DW RETAINS ALL RIGHTS TO THIS WORK AND INTENDS TO MAINTAIN THIS WORK CONFIDENTIAL AND AS A TRADE SECRET. DW MAY ALSO SEEK TO PROTECT THIS WORK AS AN UNPUBLISHED COPYRIGHT. THOSE HAVING ACCESS TO THE WORK MAY NOT COPY, USE, OR DISCLOSE THE INFORMATION IN THE WORK UNLESS SPECIFICALLY AUTHORIZED BY DW TO DO SO.

DRAWORKS

DWN. TF	DATE 03/21/2018	
APPD. -	DATE -	
REV. DWN. CH	DATE 11/29/2018	
REV. APPD. -	DATE -	

Project: DWCRT External

Description: Circulator Assembly External

Size: 4-1/2"-7-5/8"

DFTSCALE 1:8 WEIGHT(LB)

Part NO. 606188

REV. PT - SHEET 2 of 2

C:\dw_vault\dw jobs\handling tools\dw0003\dw0003.2\cad files\

Printed copy is

10.9.1 External Circulator Cartridge Assembly, 4-1/2" – 5"

IF IN DOUBT...PLEASE ASK!

ITEM NO.	PART NUMBER	DESCRIPTION	Size	Toolbox Size	QTY.
1	606404	Circulator Sleeve	4-1/2" - 5"		1
2	601094	Cup Lock Sleeve	4-1/2"-5"		1
3	606410	Gage Ring Sleeve	4-1/2" - 5"		1
4	601096	GageRing	4-1/2" 9.5-11.6# 10.5#		1
5	700611.	O-Ring		2-229	2
6	601107	Packer Cup	4-1/2" 9.5-11.6#		1
7	601114	Thimble	4-1/2" 9.5-13.5#		1

ITEM NO.	PART NUMBER	DESCRIPTION	Size	QTY.
4	601098	GageRing	5" 15-18#	1
6	601109	Packer Cup	5" 15/18#	1
7	601115	Thimble	5" 15-21.4#	1

ITEM NO.	PART NUMBER	DESCRIPTION	Redress Kit/QTY.
50	606218	Redress Kit	1

See Packer Cup and Gage Ring List for complete list of availbe components 4-1/2" - 5"

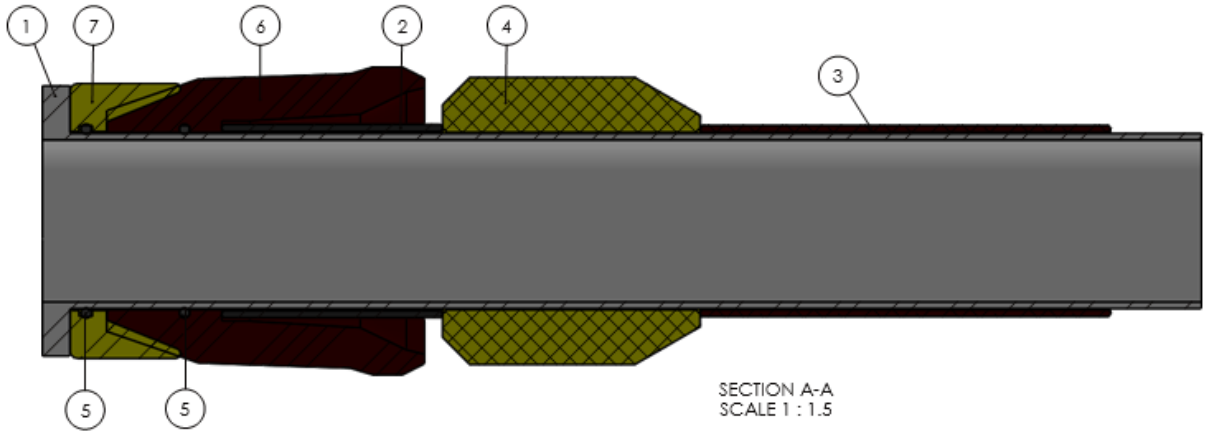

SECTION A-A
SCALE 1 : 1.5

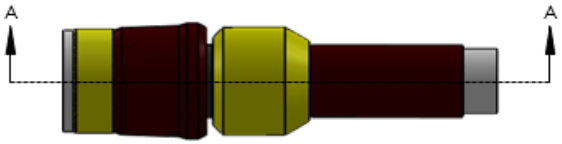

Hoist:
Torque:
Pressure:
CRITICAL COMPONENT: No

DW0003
Circulator Cartridge Assembly
4-1/2" - 5"
606067
PT- -
1 of 1

C:\dw_vault\dw jobs\mud tools\circulator part\cad files\

Printed copy is

10.9.2 External Circulator Cartridge Assembly, 5-1/2” – 6-5/8”

IF IN DOUBT...PLEASE ASK!

ITEM NO.	PART NUMBER	DESCRIPTION	Size	Toolbox Size	QTY.
1	606405	Circulator Sleeve	5-1/2" - 6-5/8"		1
2	601095	Cup Lock Spacer	5-1/2"-6-5/8"		1
3	606411	Gage Ring Sleeve	5-1/2" - 6-5/8"		1
4	601100	GageRing	5-1/2" 13-15.5#		1
5	700606	O-Ring		2-233	2
6	601111	Packer Cup	5-1/2" 13-15.5#		1
7	601116	Thimble	5-1/2" 14-23#		1

ITEM NO.	PART NUMBER	DESCRIPTION	Size	QTY.
4	603935	GageRing	6" 20#	1
6	605047	Packer Cup	6" 20#	1
7	605048	Thimble	6" 20#	1
ITEM NO.	PART NUMBER	DESCRIPTION	Size	QTY.
4	605672	GageRing	6-5/8" 20-23.2#	1
6	605674	Packer Cup	6 5/8" 20-24#	1
7	605556	Thimble	6-5/8" 20-32#	1

ITEM NO.	PART NUMBER	DESCRIPTION	QTY.
50	606219	Redress Kit	2

See Packer Cup and Gage Ring List for complete list of availbe components 4-1/2" - 5"

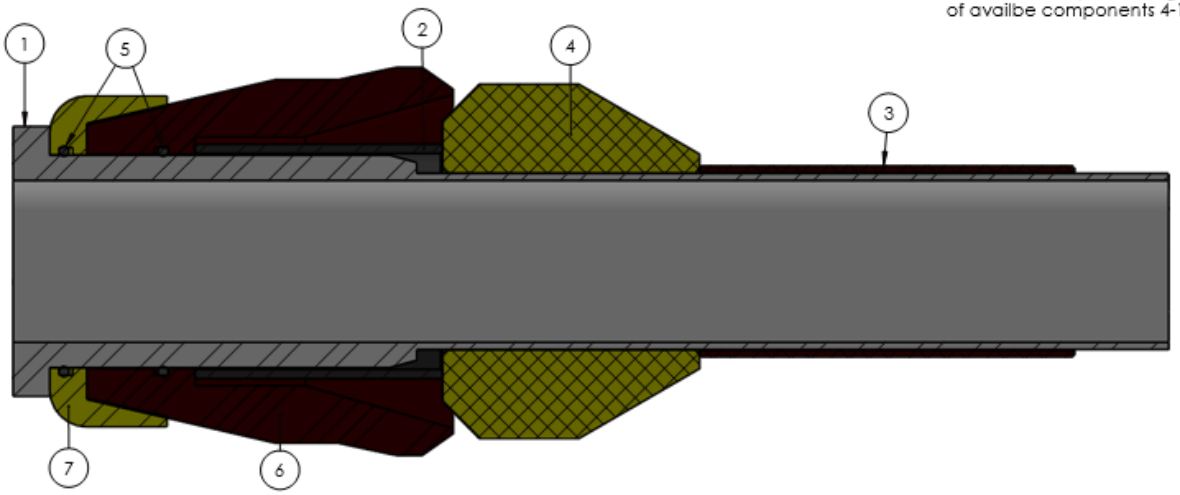

SECTION A-A
SCALE 1 : 1.5

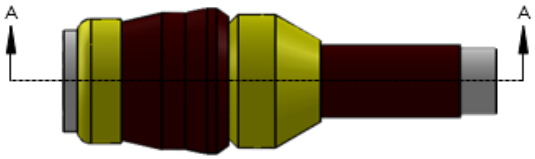

Hoist:
Torque:
Pressure:
CRITICAL COMPONENT:

DRAWORKS

Project: DW0003
Description: Circulator Cartridge Assembly
Size: 5-1/2" - 6-5/8"
Part NO. 606069
REV. PT02 -
SHEET 1 of 1

C:\dw_vault\dw jobs\mud tools\circulator part\cad files\

Printed copy is

10.9.3 External Circulator Cartridge Assembly, 7” – 7-5/8”

IF IN DOUBT...PLEASE ASK!

ITEM NO.	PART NUMBER	DESCRIPTION	Size	Toolbox Size	QTY.
1	606406	Circulator Sleeve	7" - 7-5/8"		1
2	605080	Cup Spacer	7"-7-5/8" 4"ID		1
3	606412	Gage Ring Sleeve	7" - 7-5/8"		1
4	605077	GageRing	7" 35#		1
5	700612	O-Ring		2-242	2
6	605012	Packer Cup	7" 35#		1
7	605000	Thimble	7"		1

ITEM NO.	PART NUMBER	DESCRIPTION	Size	QTY.
4	605078	GageRing	7-5/8" 24-29.7#	1
6	605010	Packer Cup	7-5/8" 24-29.7 #	1
7	605009	Thimble	7-5/8"	1

ITEM NO.	PART NUMBER	DESCRIPTION	QTY.
50	606221	Redress Kit	1

See Packer Cup and Gage Ring List for complete list of available components 7" - 7-5/8"

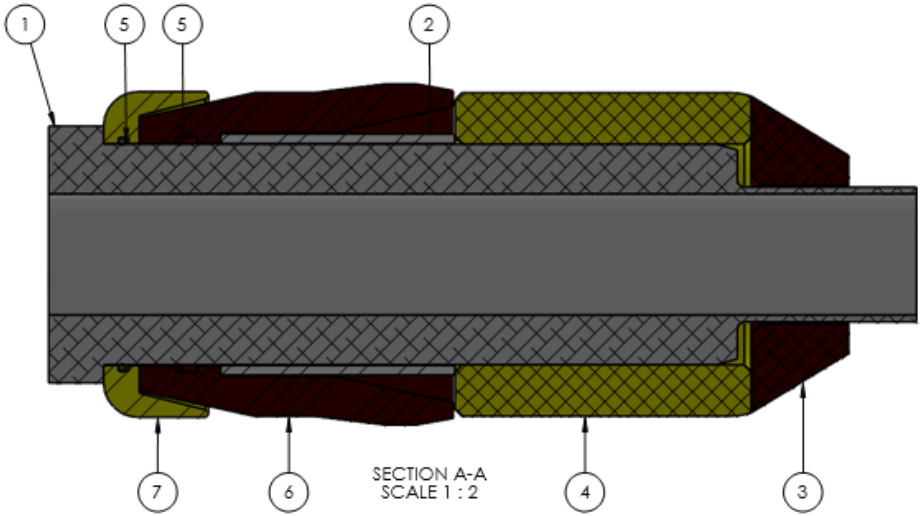

SECTION A-A
SCALE 1 : 2

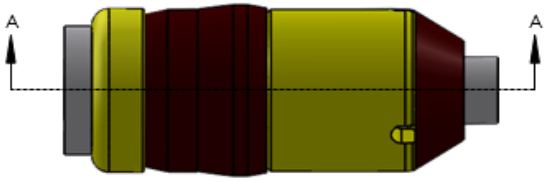

CRITICAL COMPONENT: No

DO NOT SCALE FOR DIMENSIONS. ALL DIMENSIONS ARE IN INCHES. REMOVE ALL BURRS. RADIUS ALL CORNERS .005/.015. BREAK ALL SHARP EDGES .005/.030 X 45° OR .005/.030 R. DRILLED HOLES SHOULD BE ON THE PLUS SIDE OF THE TOLERANCE

DECIMAL TOLERANCES: .X = ±.033; .XX = ±.015; .XXX = ±.005 PERPEND. ± 0.25°
FRACTION ± 1/32; ANGULAR ± 0.50°
SURFACE FINISH: MACHINED 250RMS; STRAIGHT THDS. 175RMS; TAPERED THDS. 125RMS
CONCENTRICITY: MACHINED SURFACES OD - ID .010 TIR; ID - ID .010 TIR; OD - OD .010 TIR; AS R/MACH. .005 TIR

MATERIAL

FINISH SPECS
1:
2:
3:
4:

INTERPRET DRAWING PER ASME Y14.5-2009
MATERIAL AND PROCESS SPECIFICATIONS NUMBERS ON THIS DRAWING ARE TO ALWAYS REFERENCE THE LATEST APPROVED REVISION.
DO NOT SCALE DRAWINGS. IF ... CONTACT DW FOR CLARIFICATION.

THIS DOCUMENT MAY NOT BE COPIED OR REPRODUCED IN WHOLE OR IN PART IN ANY WAY WITHOUT THE EXPRESS WRITTEN CONSENT OF DW. THIS DOCUMENT ALSO IS AN UNPUBLISHED WORK OF DW. DW CLAIMS ALL RIGHTS TO THIS WORK AND INTENDS TO MAINTAIN THIS WORK CONFIDENTIAL AND AS A TRADE SECRET. DW MAY ALSO SEEK TO PROTECT THIS WORK AS AN UNPUBLISHED COPYRIGHT. ... UNLESS EXPRESSLY AUTHORIZED BY DW TO DO SO.

DRAWORKS

DWN.	TF	DATE 04/05/2018
APPD.	JL	DATE 11/30/2018
REV. DWN.	TF	DATE 11/30/2018
REV. APPD.	-	DATE -

Project: DWCRT external
Description: Circulator Cartridge Assembly
Size: 7" - 7-5/8"
DFT SCALE: 1:4 WEIGHT: (LBS)
Part NO.: 606071
REV.: -- - SHEET 1 of 1

C:\dw_vault\dw jobs\mud tools\circulator part\cad files\

Printed copy is

Section 11 - DWCRT Assembly Tools

11.1 Internal Assembly Tools

IF IN DOUBT...PLEASE ASK!

ITEM NO.	PART NUMBER	DESCRIPTION	Optional/QTY.	Required/QTY.
1	605242	Assembly Stand	1	-
2	604080	C-Series Lock Nut Tool	1	1
3	700053	DW Grease	1	1
4	605244	Hanger Assembly	1	1
5	605235	Spanner Wrench	1	1
6	605319	Transport Case	1	-
7	605571	Pressure Test Plug	1	-
8	700778	Tape	1	-
9	606421	Spring Plate Compressor	2	-
10	606560	Installation Rod	1	-
11	605605	Dovetail Mandrel Thread Protector	1	-
12	605290	Thread Protector	1	-
13	800020	Tool Bag	1	-
14	800062	Shop Press	1	-

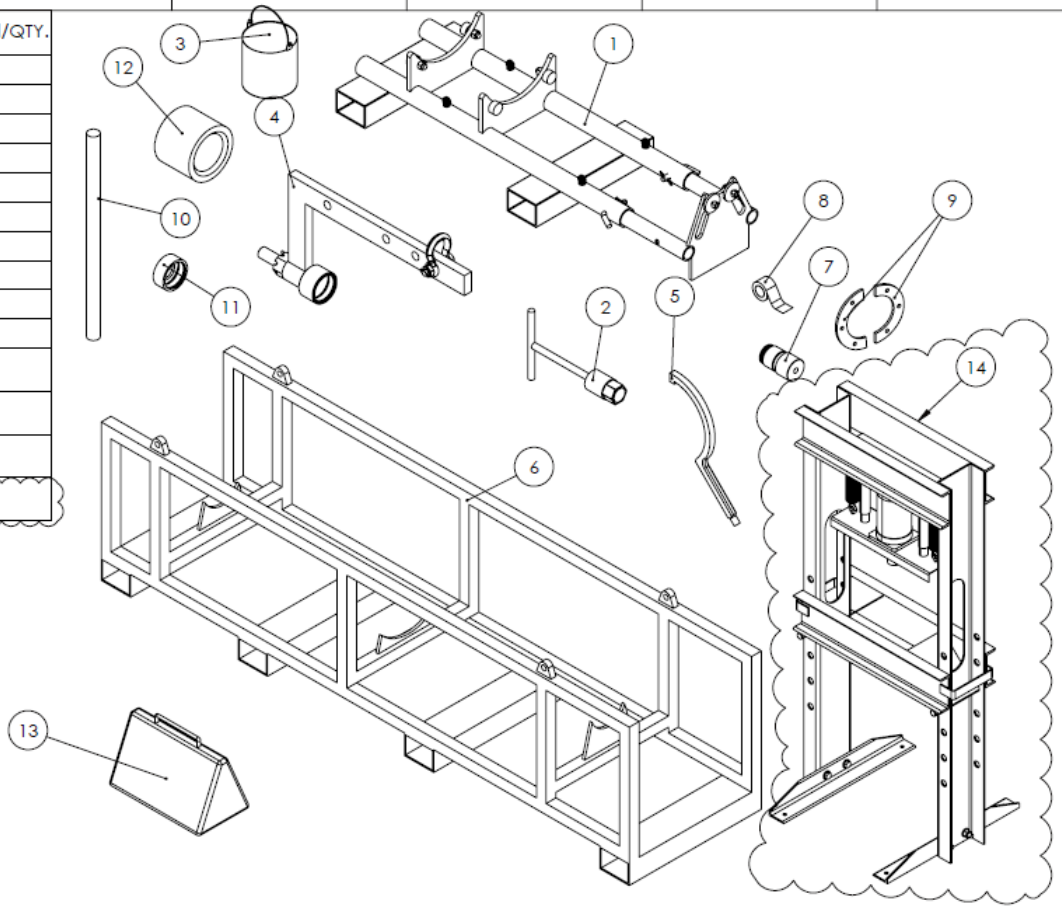

Hoist:

Torque:

Pressure:

CRITICAL COMPONENT:

UNLESS OTHERWISE SPECIFIED

DO NOT SCALE FOR DIMENSIONS. ALL DIMENSIONS ARE IN INCHES. REMOVE ALL BURRS. RADIUS ALL CORNERS .005/.047. BREAK ALL SHARP EDGES .005/.020 X 45° OR .005/.020 R DRILLED HOLES SHOULD BE ON THE PLUS SIDE OF THE TOLERANCE

DECIMAL TOLERANCES		SURFACE FINISH	CONCENTRICITY
.X = ±.032	FRACTION ± 1/32	MACHINED 250RMS	MACHINED SURFACES OD - ID .010 TIR
.XX = ±.015	ANGULAR ± 0.50°	STRAIGHT THDS. 175RMS	ID - ID .010 TIR
.XXX = ±.005	PERPEND. ± 0.25°	TAPERED THDS. 125RMS	OD - OD .010 TIR
			AS R /MACH. .005 TIR

MATERIAL

PROCESS SPECS.
1:
2:
3:
4:

INTERPRET DRAWING PER ASME Y14.5-2009
MATERIAL AND PROCESS SPECIFICATIONS NUMBERS ON THIS DRAWING ARE TO ALWAYS REFERENCE THE LATEST APPROVED REVISION.

©2019 BY DRAWWORKS, L.P. - BOLING DEVELOPMENT GENERAL PARTNER
THIS DOCUMENT IS CONFIDENTIAL AND IS THE PROPERTY OF DRAWWORKS, L.P. (DW). IT MAY NOT BE COPIED OR REPRODUCED IN WHOLE OR IN PART IN ANY WAY WITHOUT THE EXPRESS WRITTEN CONSENT OF DW. THIS DOCUMENT ALSO IS AN UNPUBLISHED WORK OF DW. DW OWNS ALL RIGHTS TO THE WORK AND INTENDS TO MAINTAIN THIS WORK CONFIDENTIAL AND AS A TRADE SECRET. DW MAY ALSO SEEK TO PROTECT THIS WORK AS AN UNPUBLISHED COPYRIGHT. THOSE HAVING ACCESS TO THE WORK MAY NOT COPY, USE, OR DISCLOSE THE INFORMATION IN THIS WORK UNLESS EXPRESSLY AUTHORIZED BY DW TO DO SO.

DWN. JL	DATE 11/05/2018	Project	DW0013
APPD.	DATE	Description	Assembly Tools
REV. DWN. CH	DATE 05/21/2019	Size	DWCRT
REV. APPD. RU	DATE 05/22/2019	DFT SCALE 1:32 WEIGHT(LBS)	
		Part NO. 606381	REV. G
			SHEET 1 of 1

C:\DW_Vault\DW Jobs\Handling Tools\DW0013\CAD Files\

Printed copy is **UNCONTROLLED**

11.2 Internal 1K Tools

IF IN DOUBT...PLEASE ASK!

ITEM NO.	PART NUMBER	DESCRIPTION	Optional/QTY.	Required/QTY.
1	605561	Assembly Stand	1	-
2	604080	C-Series Lock Nut Tool	1	1
3	700053	DW Grease	1	1
4	605244	Hanger Assembly	1	1
5	605491	Spanner Wrench	1	1
6	605548	Transport Case	1	-
7	700778	Tape	1	-
8	605571	Pressure Test Plug	1	-
9	606560	Installation Rod	1	-
10	605606	Dovetail Mandrel Thread Protector	1	-
11	605290	Thread Protector	1	-
12	800020	Tool Bag	1	-
13	800062	Shop Press	1	-

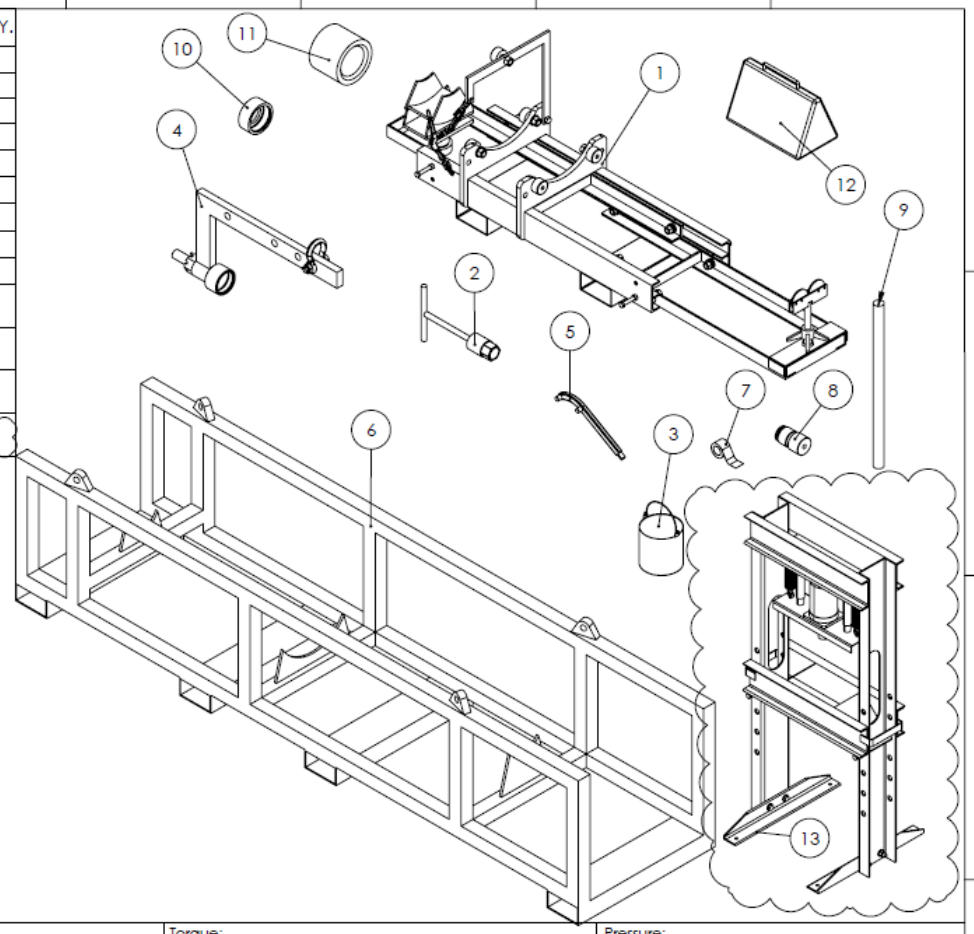

Hoist:

Torque:

Pressure:

CRITICAL COMPONENT: No

UNLESS OTHERWISE SPECIFIED

DO NOT SCALE FOR DIMENSIONS. ALL DIMENSIONS ARE IN INCHES. REMOVE ALL BURRS. RADIUS ALL CORNERS .005/.047. BREAK ALL SHARP EDGES .005/.020 X 45° OR .005/.020 R DRILLED HOLES SHOULD BE ON THE PLUS SIDE OF THE TOLERANCE

DECIMAL TOLERANCES		SURFACE FINISH	CONCENTRICITY
.X = ±.032	FRACTION ± 1/32	MACHINED 250RMS	MACHINED SURFACES OD - ID .010 TIR
.XX = ±.015	ANGULAR ± 0.50°	STRAIGHT THDS. 175RMS	ID - ID .010 TIR
.XXX = ±.005	PERPEND. ± 0.25°	TAPERED THDS. 125RMS	OD - OD .010 TIR
			AS R/MACH. .025 TIR

MATERIAL

PROCESS SPECS.
1: -
2:
3:
4:

INTERPRET DRAWING PER ASME Y14.5-2009
MATERIAL AND PROCESS SPECIFICATIONS NUMBERS ON THIS DRAWING ARE TO ALWAYS REFERENCE THE LATEST APPROVED REVISION.

©2019 BY DRAWWORKS, L.P. : BOLING DEVELOPMENT GENERAL PARTNER
THIS DOCUMENT IS CONFIDENTIAL AND IS THE PROPERTY OF DRAWWORKS, L.P. (DW). IT MAY NOT BE COPIED OR REPRODUCED IN WHOLE OR IN PART IN ANY WAY WITHOUT THE EXPRESS WRITTEN CONSENT OF DW. THIS DOCUMENT ALSO IS AN UNPUBLISHED WORK OF DW. DW OWNS ALL RIGHTS TO THIS WORK AND INTENDS TO MAINTAIN THIS WORK CONFIDENTIAL AND AS A TRADE SECRET. DW MAY ALSO SEEK TO PROTECT THIS WORK AS AN UNPUBLISHED COPYRIGHT. THOSE HAVING ACCESS TO THE WORK MAY NOT COPY, USE, OR DISCLOSE THE INFORMATION IN THIS WORK UNLESS EXPRESSLY AUTHORIZED BY DW TO DO SO.

DWN. JL	DATE 11/05/2018	
APPD.	DATE	
REV. DWN. CH	DATE 05/21/2019	
REV. APPD. RU	DATE 05/22/2019	

Project: DW0004

Description: Assembly Tool

Size: DWCRT1K

DFT SCALE 1:48 WEIGHT(LBS)

Part NO. 606382

REV. G

SHEET 1 of 1

C:\DW_Vault\DW Jobs\Handling Tools\DW0004\CAD Files\

Printed copy is **UNCONTROLLED**

11.3 External Assembly Tools

IF IN DOUBT...PLEASE ASK!

ITEM NO.	PART NUMBER	DESCRIPTION	Optional/QTY.	Required/QTY.
1	604080	C-Series Lock Nut Tool	1	1
2	606390	Cradle Assembly	1	-
3	700053	DW Grease	1	1
4	605244	Hanger Assembly	1	1
5	606419	Magnetic Wedge Assembly	6	6
6	606420	Ramp Segment Spinner	1	-
7	606046	Slip Installation Assembly	1	-
8	606307	Slip Jack Assembly Tool Assembly	3	-
9	605235	Spanner Wrench	1	1
10	700772	Tool Box	1	-
11	606267	Transport Case Assembly	1	-
12	606306	Wear Guide Lock Socket	1	-
13	700660	2-1/2" Hex Socket	1	1
14	700778	Tape	1	-
15	700779	Eye Bolt	2	-
16	700032	Bolt	6	-
17	606542	Pressure Test Plug External	1	-
18	606560	Installation Rod	1	-
19	605605	Dovetail Mandrel Thread Protector	1	-
20	800020	Tool Bag	1	-
21	800062	Shop Press	1	-
22	606605	Spring Compressor Assembly	1	-

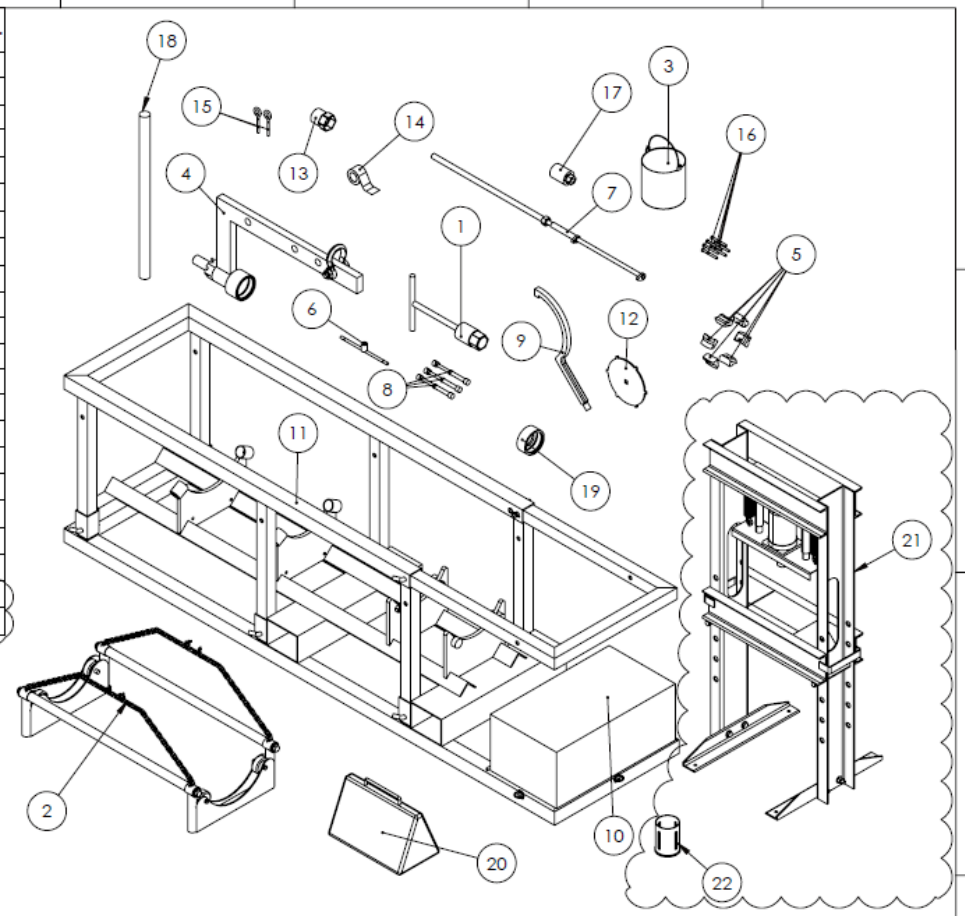

Hoist: -
Torque: -
Pressure: -
CRITICAL COMPONENT: No

UNLESS OTHERWISE SPECIFIED
DO NOT SCALE FOR DIMENSIONS. ALL DIMENSIONS ARE IN INCHES. REMOVE ALL BURRS. RADIUS ALL CORNERS .025/.047. BREAK ALL SHARP EDGES .005/.020 X 45° OR .005/.020 R. DRILLED HOLES SHOULD BE ON THE PLUS SIDE OF THE TOLERANCE.

DECIMAL TOLERANCES		SURFACE FINISH	CONCENTRICITY
.X = ±.032	FRACTION ± 1/32	MACHINED 250RMS	MACHINED SURFACES OD - ID .010 TIR
.XX = ±.015	ANGULAR ± 0.50°	STRAIGHT THDS. 175RMS	ID - ID .010 TIR
.XXX = ±.005	PERPEND. ± 0.25°	TAPERED THDS. 125RMS	OD - OD .010 TIR
			AS R /MACH. .005 TIR

MATERIAL
PROCESS SPECS.
1: -
2:
3:
4:

INTERPRET DRAWING PER ASME Y14.5-2009
MATERIAL AND PROCESS SPECIFICATIONS NUMBERS ON THIS DRAWING ARE TO ALWAYS REFERENCE THE LATEST APPROVED REVISION.
©2019 BY DRAWWORKS, L.P. : BOLING DEVELOPMENT GENERAL PARTNER
THIS DOCUMENT IS CONFIDENTIAL AND IS THE PROPERTY OF DRAWWORKS, L.P. (DW). IT MAY NOT BE COPIED OR REPRODUCED IN WHOLE OR IN PART IN ANY WAY WITHOUT THE EXPRESS WRITTEN CONSENT OF DW. THIS DOCUMENT ALSO IS AN UNPUBLISHED WORK OF DW. DW OWNS ALL RIGHTS TO THIS WORK AND INTENDS TO MAINTAIN THIS WORK CONFIDENTIAL AND AS A TRADE SECRET. DW MAY ALSO SEEK TO PROTECT THIS WORK AS AN UNPUBLISHED COPYRIGHT. THOSE HAVING ACCESS TO THE WORK MAY NOT COPY, USE, OR DISCLOSE THE INFORMATION IN THIS WORK UNLESS EXPRESSLY AUTHORIZED BY DW TO DO SO.

DWN.	CH	DATE	11/05/2018
APPD.	RU	DATE	03/18/2019
REV. DWN.	CH	DATE	05/21/2019
REV. APPD.	RU	DATE	05/22/2019

Project: DW0003
Description: Assembly Tools
Size: DWCRT External
DFT SCALE 1:24 WEIGHT(LBS) n/a
Part NO. 606383
REV. G
SHEET 1 of 1

C:\DW_Vault\DW Jobs\Handling Tools\DW0003\DW0003.2\CAD Files\

Printed copy is **UNCONTROLLED**

Section 12 - Assembly - Head

NOTE:

- **The DWCRT is modular. Use the correct Mandrel and Mandrel Nut for the tool you are building.**
- **Refer to Assembly-BOM's for part number, description and quantity.**
- **Tool Assembly has pinch points. Keep your fingers and hands clear.**

1. Load the Dovetail Mandrel Nut with the Dovetail Mandrel Nut Springs. Insert (Qty-10) Dovetail Mandrel Nut Springs into the counterbore holes on the bottom of the Dovetail Mandrel Nut.

2. Lay the Spring Retainer in the groove on the Dovetail Mandrel Nut and over the Dovetail Mandrel Nut Springs. The Spring Retainer should fall over the springs and fit into the groove, as seen below. Be sure the bolts line up with the horseshoe slots.

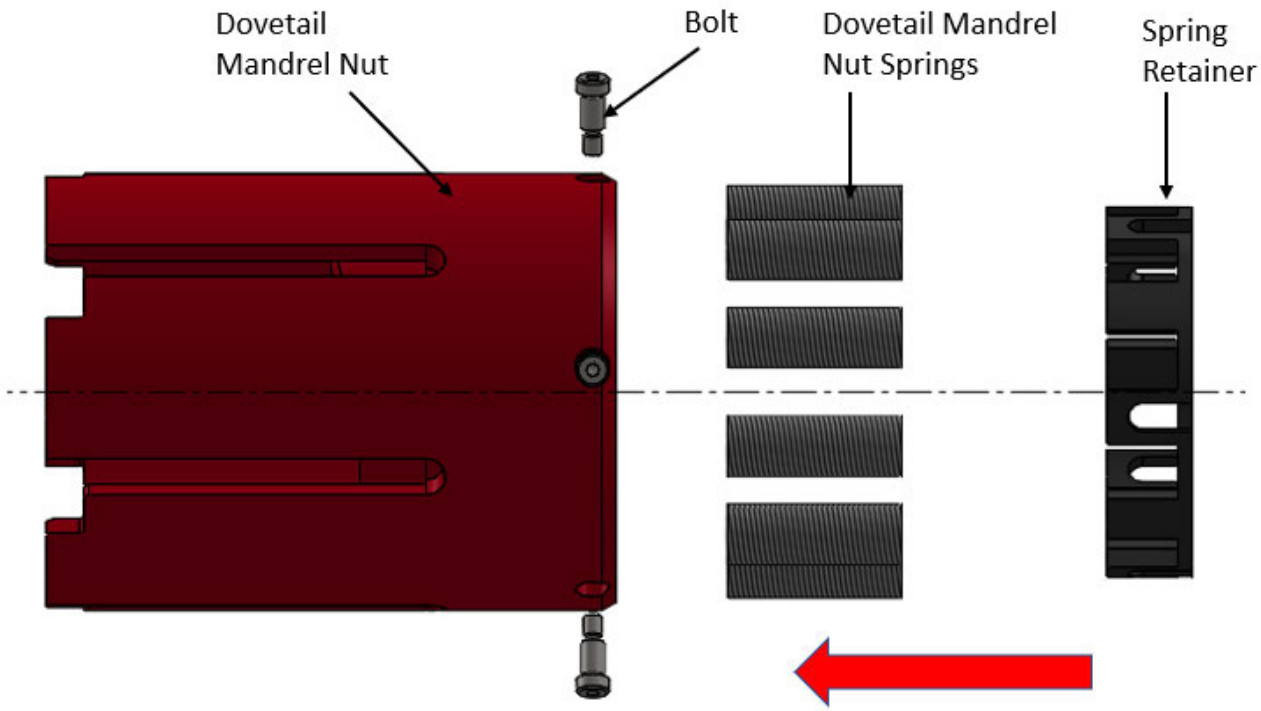

3. Compress the Dovetail Mandrel Nut Springs and Spring Retainer with a press (~10Ton) or Compression Assembly Tool. Use a flat plate to press all the Dovetail Mandrel Nut Springs and the Spring Retainer down at the same time.

4. Coat the Dovetail Mandrel Nut Bolts with anti-seize. ***Refer to DWCRT lubrication and maintenance requirement for more details.*** While the Dovetail Mandrel Nut Springs are compressed, insert the Dovetail Mandrel Nut Bolts into the side holes on the Dovetail Mandrel Nut. Tighten the Dovetail Mandrel Nut Bolts. ***Refer to Appendix 1.5: Bolt and Set Screw Torque for recommended torque chart.***

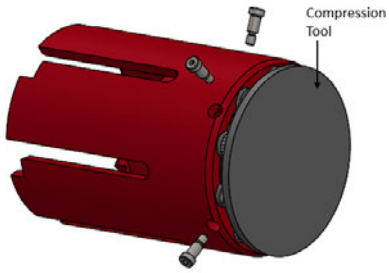

5. After locking the Spring Retainer with the Dovetail Mandrel Nut Bolts, the assembly should look as follows.

6. Lay the Dovetail Mandrel Nut on the floor or a pallet. Grease (DW Grease, 700053) ID Threads. ***Use recommended grease, see DWCRT Lubrication and Maintenance for recommended grease.***

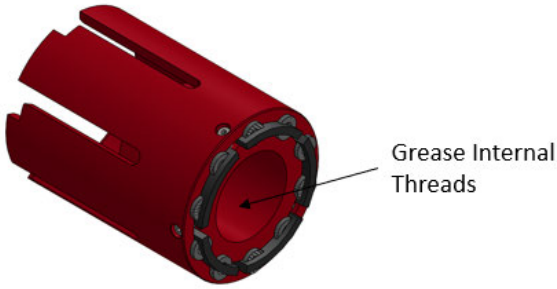

7. Select the Dovetail Mandrel size to be installed in the tool. We will use the 225 Ton 5½" Dovetail Mandrel for the illustration purposes of this assembly example. Refer to the list of different Dovetail Mandrels for size and tonnage ranges. ***Refer to Appendix 1.1: Size and Ratings for other Mandrel Sizes.*** Insert Polypak Seal into the mandrel with the O-ring facing away from the indicator.

8. Pick up the Dovetail Mandrel with a strap at the pickup point as shown below. Alternatively, use the McCoy L-Shaped Hanger for easier assembly. To use the L-Shaped Hanger, simply attach a crane to the shackle in the correct hole based on tonnage, screw the Hanger's cap onto the Dovetail Mandrel (using clockwise rotation) and pick up the Dovetail Mandrel. Shackle needs to be attached to the appropriate L-Shaped Hanger hole depending on the tool Hoist capacity. Raise the Dovetail Mandrel approximately 12" off the floor and grease (DW Grease, 700053) the threads / Slip slots. ***Refer to DWCRT Lubrication and Maintenance requirement for more details.***

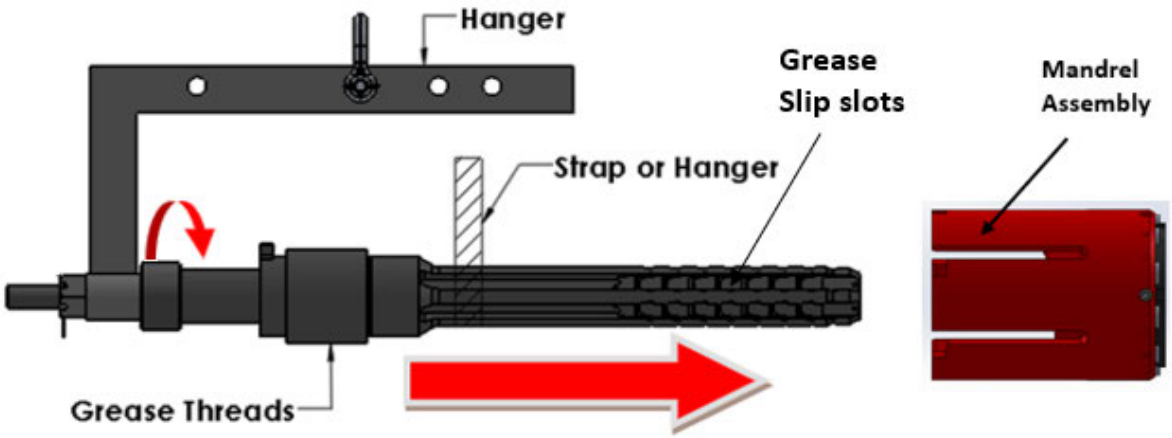

9. Slide the Dovetail Mandrel into and screw together with the Dovetail Mandrel Nut until completely made up. Use multi-purpose grease on the outside of the Mandrel nut.

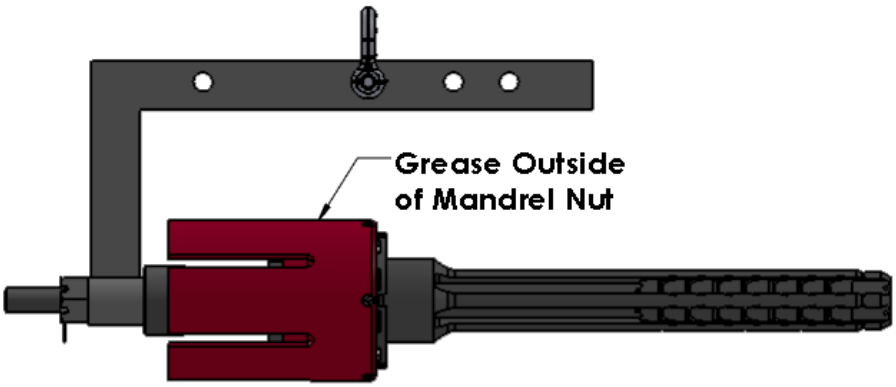

10. Now, lay the Housing on its side. While the tool may be assembled on the floor or on a pallet, utilize the McCoy CRT Assembly Stand for easier assembly. To do this, lay the Housing on the McCoy CRT Assembly Stand with the Indicator end facing away from the sliding triangle on the stand, as shown below. Use multi-purpose grease on the internal housing wall.
Warning: Strap the Housing to the Assembly Stand.

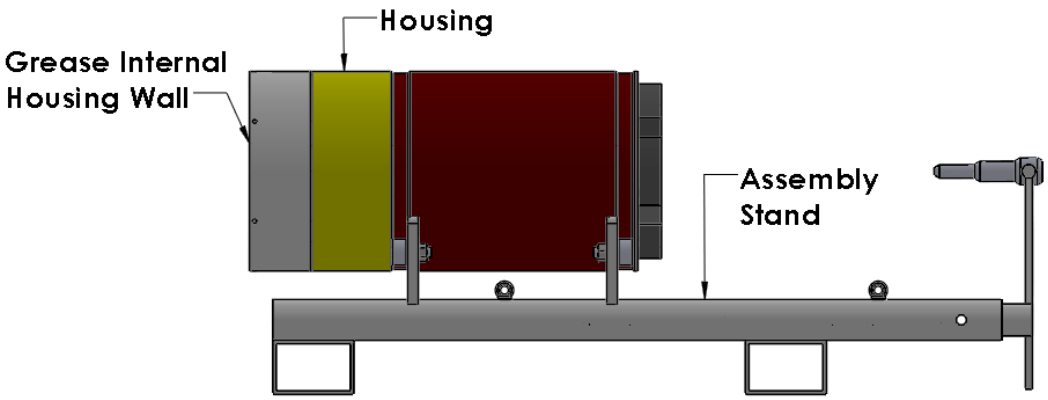

11. Use multi-purpose grease and insert the Housing ID Seal into the ID groove on the Housing. Orient the Housing ID Seal as shown in figure away from white painted end.

12. Thin grease all sides of both Thrust Washers using white lithium grease. Do not use any grease other than white lithium grease.

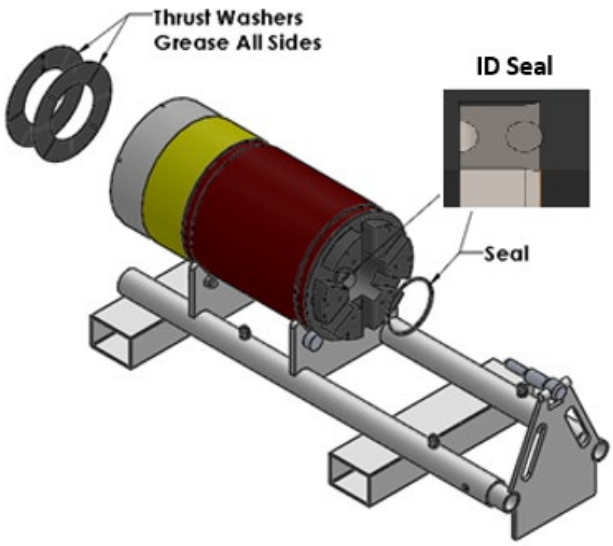

13. Insert both Thrust Washers into the Housing from the Indicator side. Make sure the internal housing wall has been thoroughly greased before insertion of the Thrust Washers.

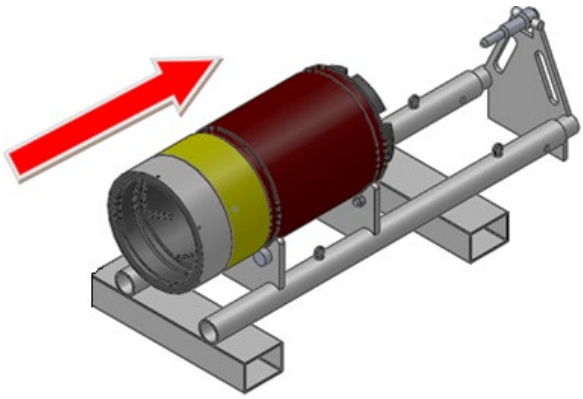

14. (If assembling an external tool, ensure the Thread Protector is installed on the Mandrel prior to insertion in the Housing). Insert the Dovetail Mandrel subassembly into the Housing. Make sure the subassembly

is inserted completely such that the Dovetail Mandrel Nut butts up to the Thrust Washers.

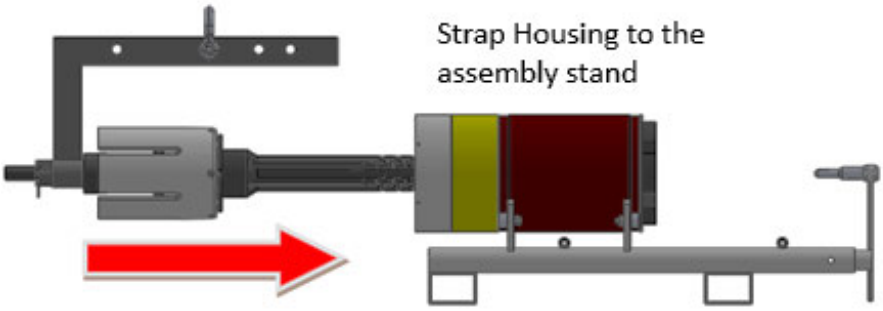

15. Once the Dovetail Mandrel subassembly is inserted into the Housing, the L-Shaped Hanger may be removed using counter-clockwise rotation. **Hint:** lifting on the end of the hanger tends to help in the Hanger removal process. Continue seating the mandrel against the thrust washers.

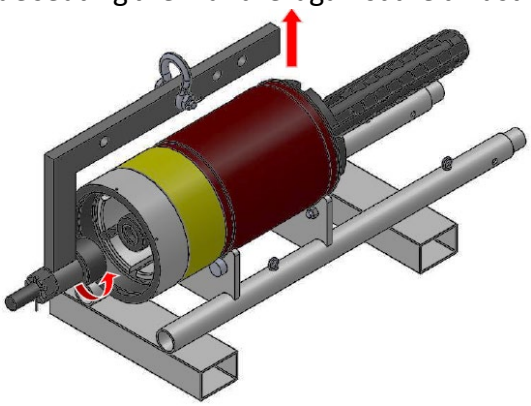

16. Use multi-purpose grease on the (Qty-2) Thrust Rings. Lock the Dovetail Mandrel subassembly into the Housing with (Qty-2) Thrust Rings followed by (Qty-1) Snap Ring. **Hint:** The Snap Ring is a spiral ring and can be installed easily by starting one end of the ring in the groove and rotating the ring until it seats completely, as illustrated below.
NOTE: If the Dovetail Mandrel is not coaxial with the housing, the Dovetail Mandrel Nut can move into the snap ring groove and prevent installation of the snap ring. Supporting the end of the Dovetail Mandrel can correct axial misalignment.

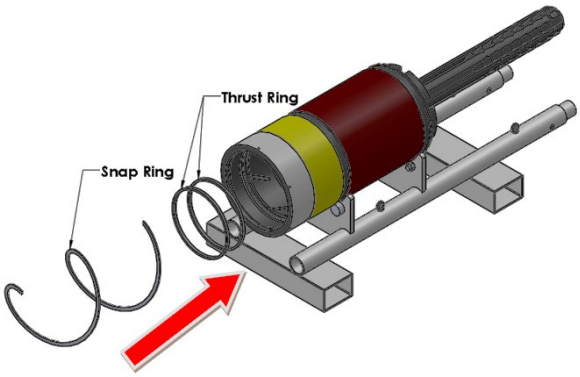

17. Once the (Qty-2) Thrust Rings (*If applicable*) and the Snap Ring are installed, verify that the Snap Ring is directly on top of the Thrust Rings as shown below (*If not applicable the snap ring will be directly on top of the Dovetail Mandrel Nut*).

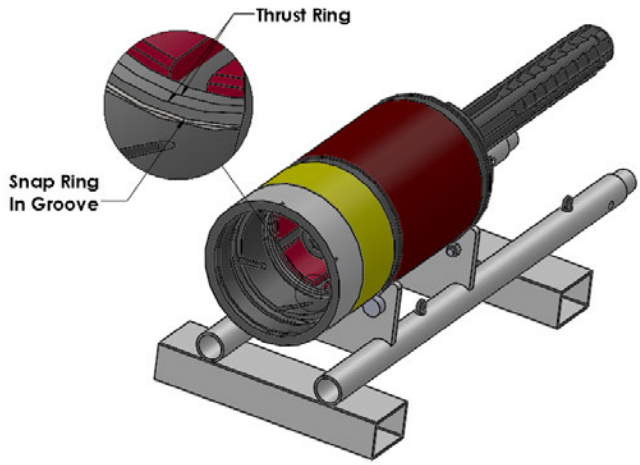

18. Apply multi-purpose grease on Top Mandrel lugs and splines. Pick up with a strap or a lifting eye and insert the Top Mandrel into the Housing. The Top Mandrel is offered in various tool joints. Rotate Top Mandrel to align with Dove Tail Mandrel Nut slot.

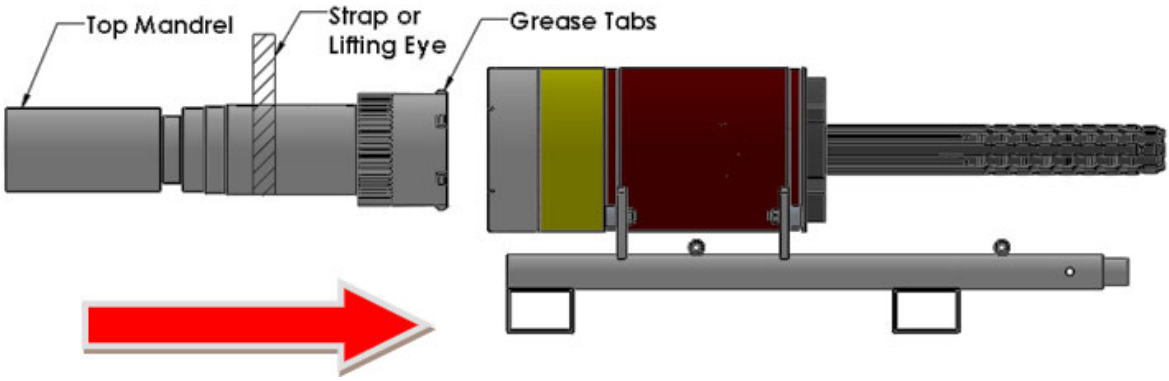

19. When inserting the Top Mandrel, line up the 6 tabs on the Top Mandrel's OD with the 6 slots of the Dovetail Mandrel Nut. Once lined up, the Top Mandrel may slide into the Housing. **Hint:** The Spiral Ring covers some of the Housing ID. This causes tight clearances while inserting the Top Mandrel. It is crucial that you have the Top Mandrel and the Housing as coaxial as possible.

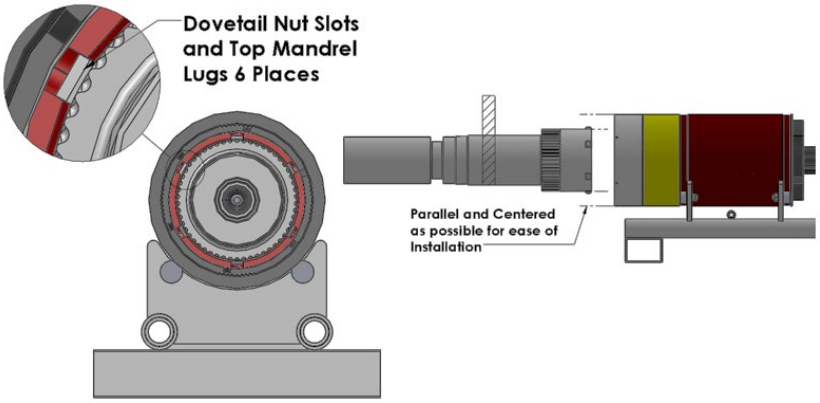

20. Apply multi-purpose grease on Clutch, Clutch Pins and Clutch Spring. Insert (Qty-6) Clutch Springs and (Qty-6) Clutch Pins into the Clutch.

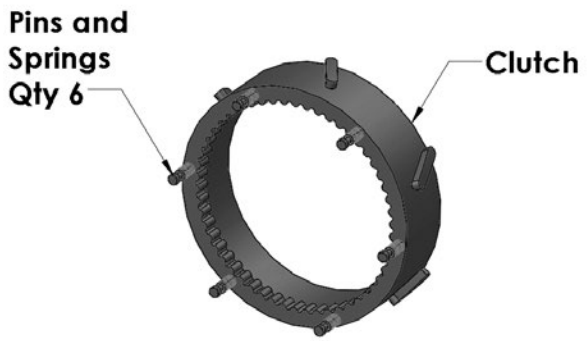

21. Orient the Clutch such that the Clutch Springs face towards the tool joint (If applicable). Orient the Clutch so that the engravement "This Side Up" faces towards the tool joint. Slide the Clutch over the Top Mandrel all the way into the ID of the Housing. The OD lugs on the Clutch will fit into and engage the angled slots on the ID of the Housing.

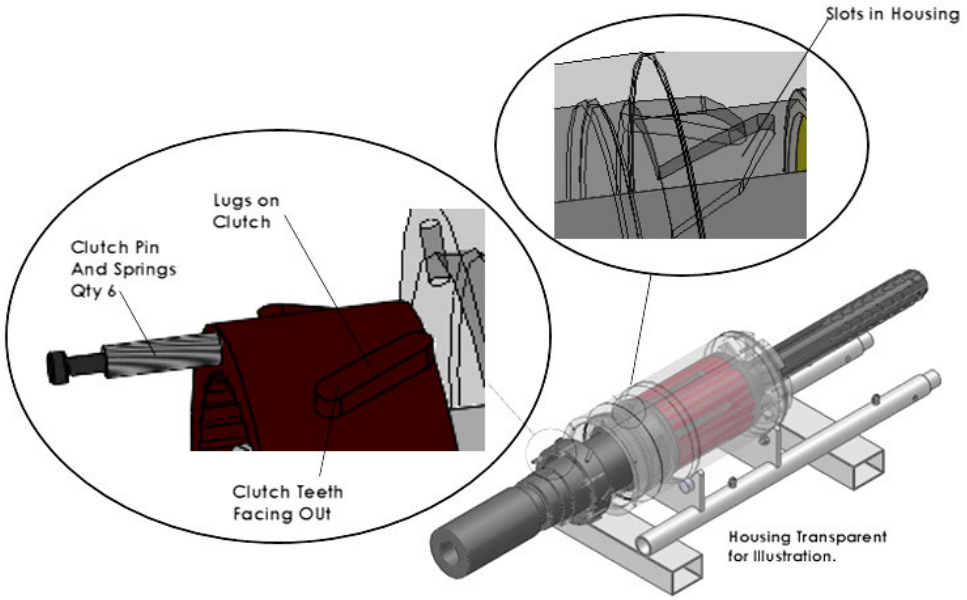

22. Install the Housing Cap O-Ring in the O-ring groove on the OD of the Housing Cap. Make sure to apply multi-purpose grease on the O-ring and the O-ring groove.

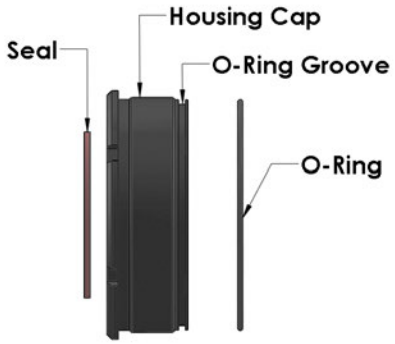

23. Place the Wiper Seal in the ID of the Housing Cap. Make sure Wiper Seal is completely in by applying pressure during installation.

24. Use multi-purpose grease on the threads on the Housing Cap and place the Housing Cap over the Top Mandrel. Slide the Housing Cap over the Top Mandrel and screw the Housing Cap into the Housing. **Hint:** The seal may contact the Top Mandrel OD threads. You may need to use a rubber mallet to help get passed the OD threads. Also make sure Housing Cap is centered with the Top Mandrel while passing through the thread.

25. Use the McCoy Spanner Wrench to screw the Housing Cap into the Housing until cap shoulders. The Housing Cap is required to be rotated few degrees counterclockwise to align the set screw holes in the Housing. Grease Set Screws with anti-seize compound. Install and tighten (Qty-6) Set Screws into the screw holes on the OD of the Housing to lock the Housing Cap to the Housing. ***Refer to Appendix 1.5: Bolt and Set Screw Torque for recommended torque chart.***

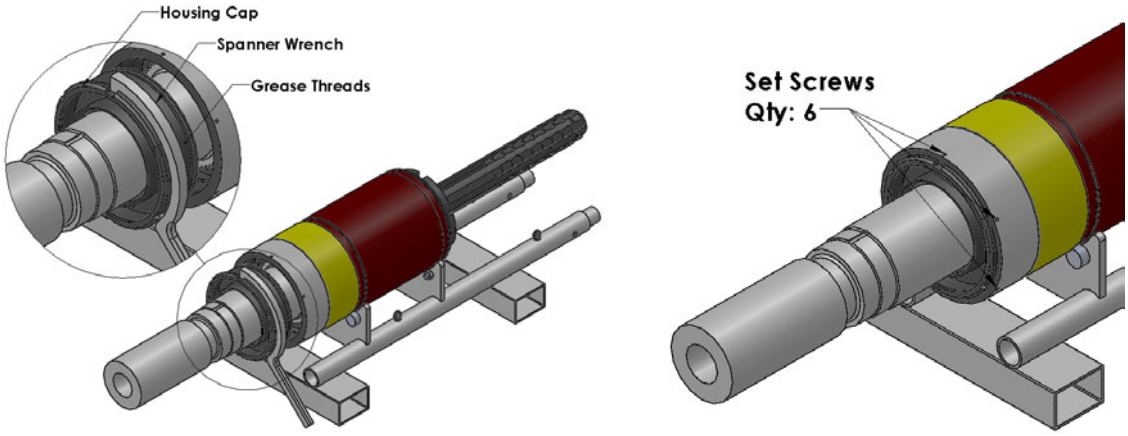

26. Grease the counterbore groove on top of the Housing Cap. Apply multi-purpose grease to complete OD of the Thrust Bearing for corrosion resistance and slide over the Top Mandrel into the Housing Cap counterbore groove.

27. Retain the Thrust Bearing by installing a Snap Ring in the Housing Cap groove just above the Thrust Bearing.

    Hint: The Snap Ring is a spiral ring and can be installed easily by starting one end of the ring in the groove and rotating the ring until it seats completely, as illustrated.

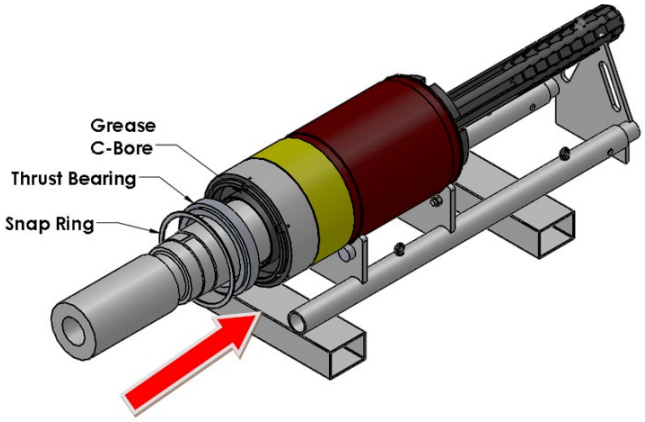

28. Prior to installing the Indicator, clean the white band. Install the O-Ring, in the O-Ring groove on the Indicator. Slide the Indicator over the Top Mandrel, Thrust Bearing, and Housing Cap. Orient the Indicator's tab to the slot in the Top Mandrel. If the Line is already on the Housing and the Indicator, make sure they are lined up during assembly.

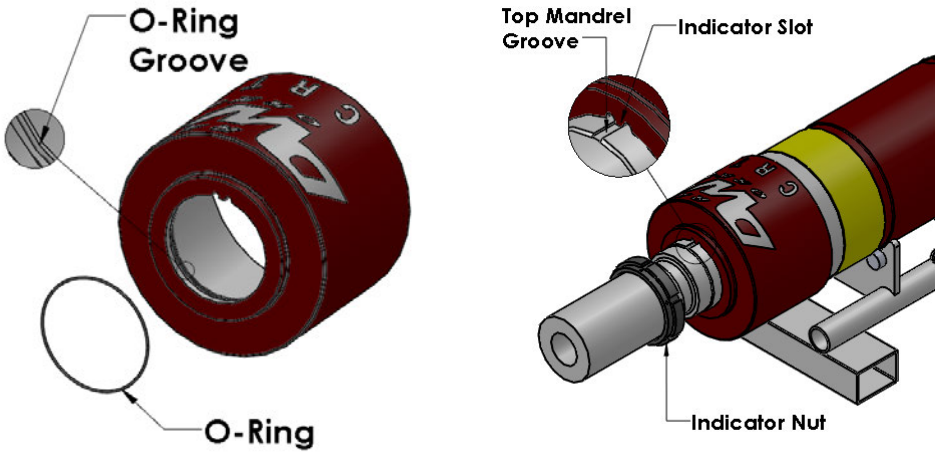

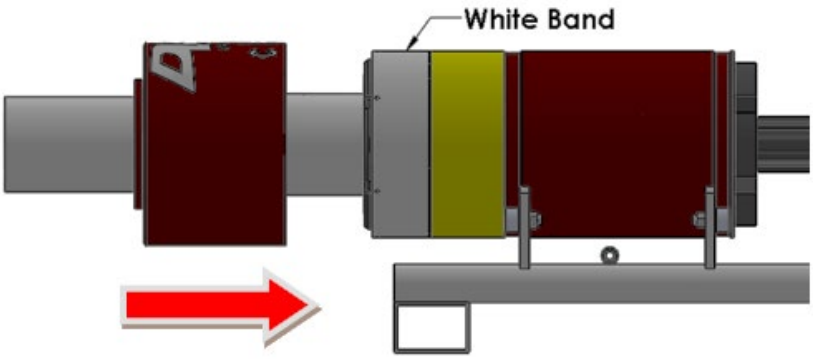

29. Apply multi-purpose grease on the OD threads of the Top Mandrel and screw on the Indicator Nut. This locks the Indicator to the Top Mandrel.

30. Anti-seize Set Screws and Insert (Qty-6) into the screw holes on the Indicator Nut and tighten to specified torque. Install Safety Clamp. ***Refer to Appendix 1.5: Bolt and Set Screw Torque for recommended torque chart.***

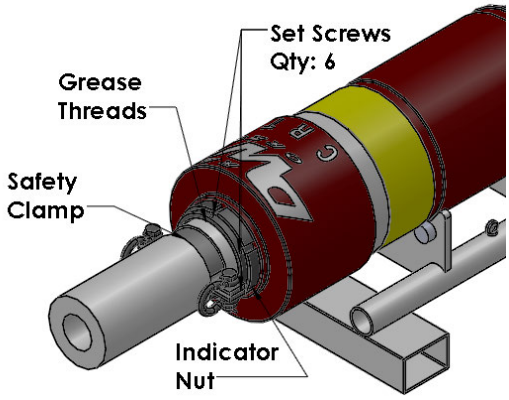

31. Apply multi-purpose grease on the Snorkel's O-ring groove and install the O-ring. Push the Snorkel into the ID of the Top Mandrel through the tool joint.

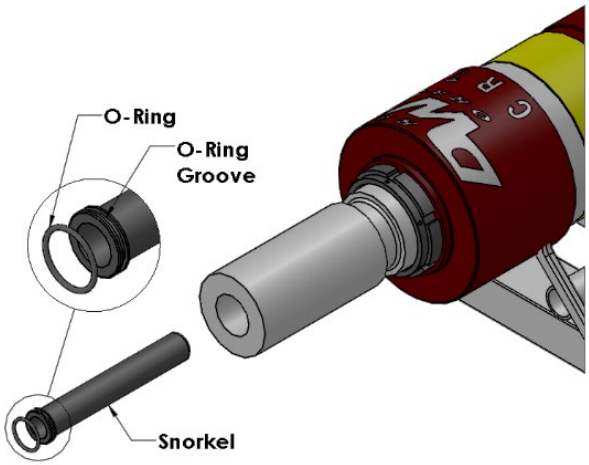

Valve Requirements:

Operators running casing sizes 4½" to 5½" who require a valve should install a C-Series Valve *(part# 602870)* which provides a flow rate of 6 bbl/min.
Operators needing higher flow rates to run casing sizes 7" to 20", skip down to step 34 to install a Spacer Sleeve
(part# 605113) instead of the C-Series Valve *(part# 602870)*.
Higher flow rates can be achieved but are not recommended as accelerated wear may occur on the ID of the tool.

32. Grease the OD of the optional C-Series Valve and orient as shown below. Insert the C-Series Valve into the Top Mandrel until the valve flush mounts the Snorkel.

33. Grease the OD of the Locking Nut. Secure the C-Series Valve and Snorkel in place with the Locking Nut. The Locking Nut is left-hand threaded; rotate counterclockwise to set the nut. The McCoy C-Series Locking Nut Tool is required to install the Locking Nut.

NOTE: Make sure the Locking Nut is tightened to atleast 250 ft-lb. The tool may fill with mud if the Locking Nut is not tight, which may prevent the tool from releasing the casing.

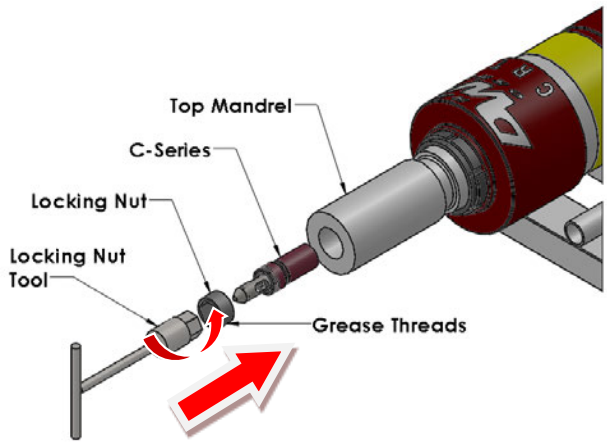

34. Higher flow rate operation: If you are running Casing sizes 7” to 20”, insert the Spacer Sleeve instead of the C-Series Valve to protect the sealing area where the C-Series Valve sits. If you would like to install a valve, attach the Shorty AutoValve™ below the Circulator for higher flow rates.

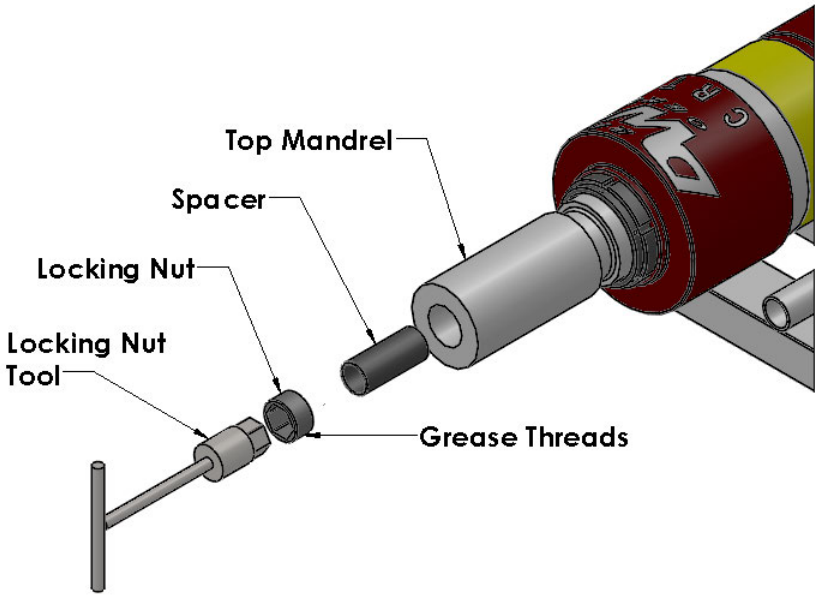

Section 13 - Assembly – Internal Grip

NOTE: The DWCRT is modular. Use the correct Dovetail Mandrel and Mandrel Nut for the tool you are building. For illustration purposes, multiple internal DWCRT Dovetail Mandrels are depicted below)

1. Apply multi-purpose grease on the ID of the Cable Guide Cover completely, Safety Ring or Attachment Ring such that it can rotate freely on the Housing. Install the Cable Guide Cover, Safety Ring or Attachment Ring over the OD groove of the Housing as shown below.

2. Grease (DW Grease, 700053) all the Dovetail Mandrel's dovetail grooves with light even grease. Refer to DWCRT lubrication and Maintenance section for more details. The dovetail grooves are very critical areas and McCoy recommends to re-grease these areas after every job.

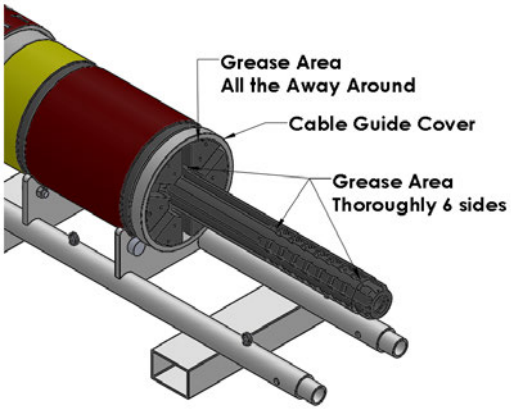

3. Apply multi-purpose grease on the spring plate. Insert 4 quantity of springs into the housing assembly along with Spring Plate. Note the directions of springs, the smaller diameter must face the indicator on the 1st spring, with alternating directions for the next 3.

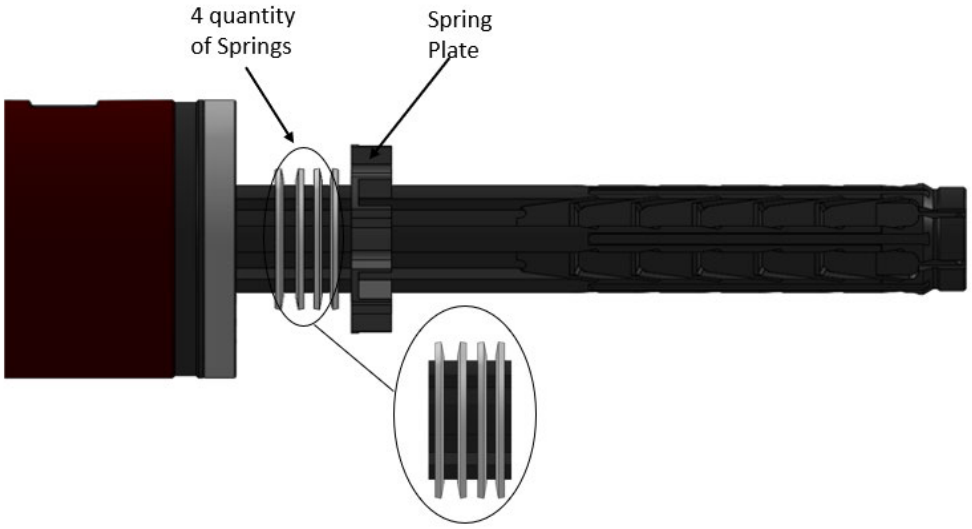

Warning: When installing the slips be sure that they do not fall out of the track. The bump plate holds the slips to the housing but may need to be held by hand until the bump plate is installed.

4. Line up the dovetails of a Slip with the dovetail grooves of the Dovetail Mandrel. Insert a Slip by sliding the Slip towards the Head of the CRT. Repeat this for all (Qty-6) Slips. ***Refer to Appendix 1.1: Size and Ratings for slip sizes and the Dovetail Mandrels they can be used in.*** Each casing size has its own set of slips.

NOTE: On DWCRT All casing sizes from 9-5/8" to 20" use the Base Slip, DWCRT1K all casing sizes from 13-3/8"-26" use the Base Slip.

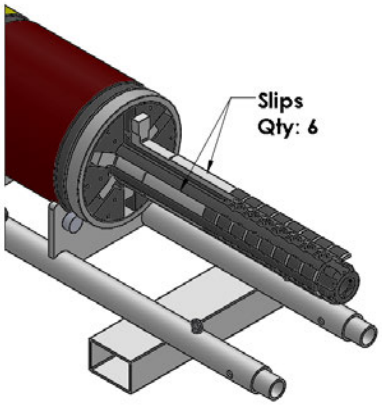

5. Bolt Spring Compression Tool to hold the Slips, Springs and Spring Plate. Place the Bump Plate on the Dovetail Mandrel and partially slide towards the Housing.

6. Remove Spring Compression Tool and insert the (Qty-6) Bump Plate Springs in the countersunk holes of the Bump Plate before seating the Bump Plate against the Housing. Apply anti-seize lubricant and bolt Bump Plate to the housing. Recheck bolt torque as per ***Appendix 1.5: Bolt and Set Screw Torque*** after all bolts are tightened and shouldered. Bolts should be torqued in an alternating pattern to ensure even force is applied on the Bump Plate.

7. <u>7-5/8" & 8-5/8"</u> Dovetail Mandrels require Wear Guides. Grease slots and slide (Qty-6) Wear Guides in the slots as shown below.

8. Grease the threads of the Wear Guide Nut and screw onto the threads at the lower end of the Dovetail Mandrel to lock the Wear Guides in place.

9. Anti-seize Set Screws. Bolt (Qty-6) Set Screws into the Wear Guide Nut to secure the Wear Guide Nut. ***Refer to Appendix 1.5: Bolt and Set Screw Torque for recommended torque chart.***

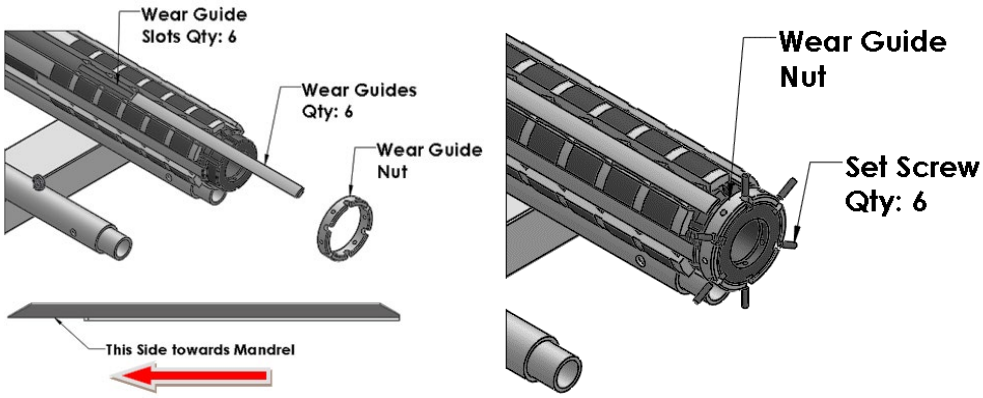

Note: For 450 T Tool sizes from 9-5/8" to 20" Base Slip are used. Also 1000 T Tool sizes from 13-3/8" to 26" Base Slip are used. Base Slip uses bolt on inserts. Below are the steps for using Base Slip with Inserts.

10. Apply multi-purpose grease on the Wear Guide slots and slide on the Wear Guide.

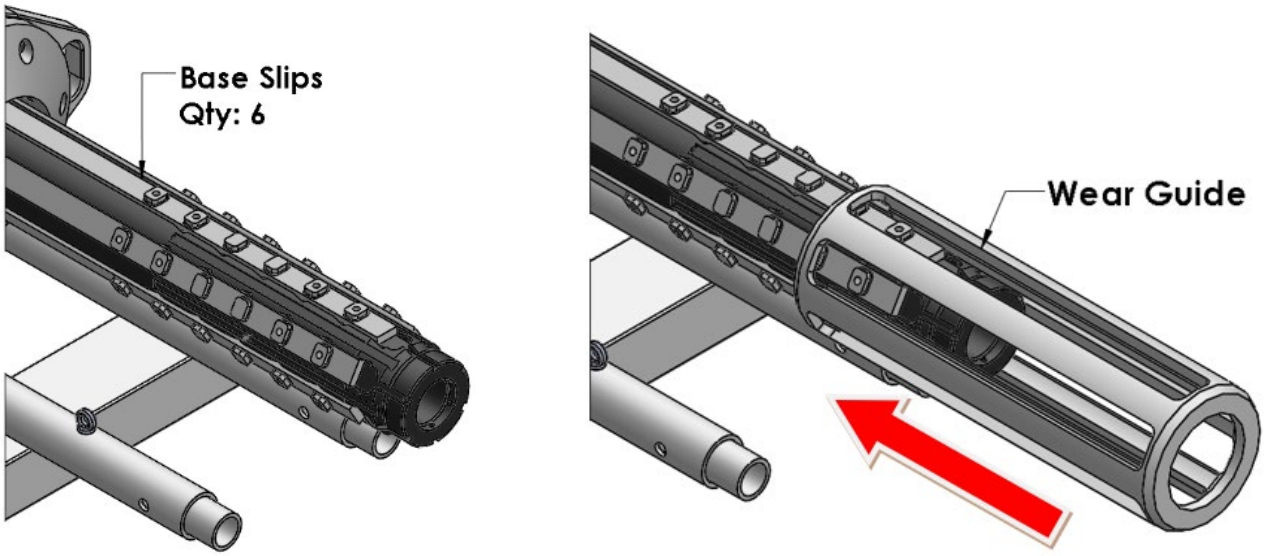

11. Apply multi-purpose grease to the lugs of the Base Slips. Bolt on the Insert needed for the size of the Casing being run.

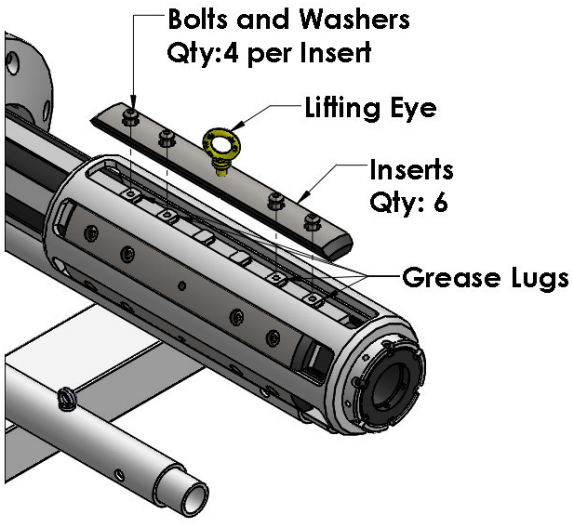

12. Repeat step 8 and 9 to complete installing Wear Guide Nut and Set Screws.

13. Now put the Line on the Indicator and the Housing. First, push the Top Sub and Indicator all the way down. Next, rotate both the Top Sub and the Indicator counterclockwise (when viewed from Mandrel side) until you hear a mechanical stop (audible click).
Warning: Loosen strap on the housing while rotating.
This should be the fully retracted position of the DWCRT. Two ways to verify that you are fully retracted are: 1) Slips/Inserts will be below the Dovetail Mandrel/Wear Guide. 2) Continued rotation will cause the Housing to rotate as well.
Note: If there is any increased resistance when releasing the tool before the internal stop is met, contact technical support. The hand operated break out activation needs to be smooth, uniform and continuous. Any additional torque during break out process may result in issues fully releasing the tool at the Rig.
Remove existing tape/paint on the indicator. Use silver duct tape to make a line straight down the side of the Indicator and Housing. Cut tape at Indicator and housing.

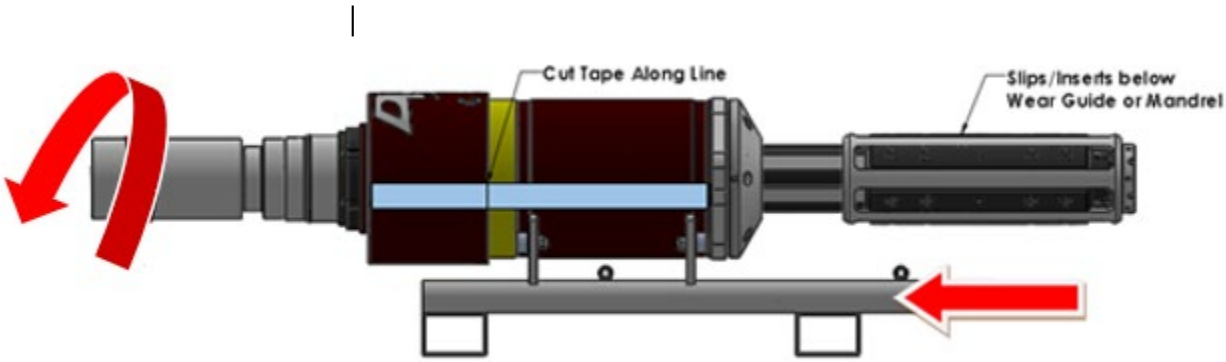

14. Screw greased Circulator Assembly into the bottom of the Dovetail Mandrel to 150 ft-lb torque (see following page for information on constructing the Circulator Assembly).

15. Anti-seize Set Screws. Insert the Set Screws corresponding to the selected Circulator Assembly. ***Refer to Appendix 1.5: Bolt and Set Screw Torque for recommended torque chart.***

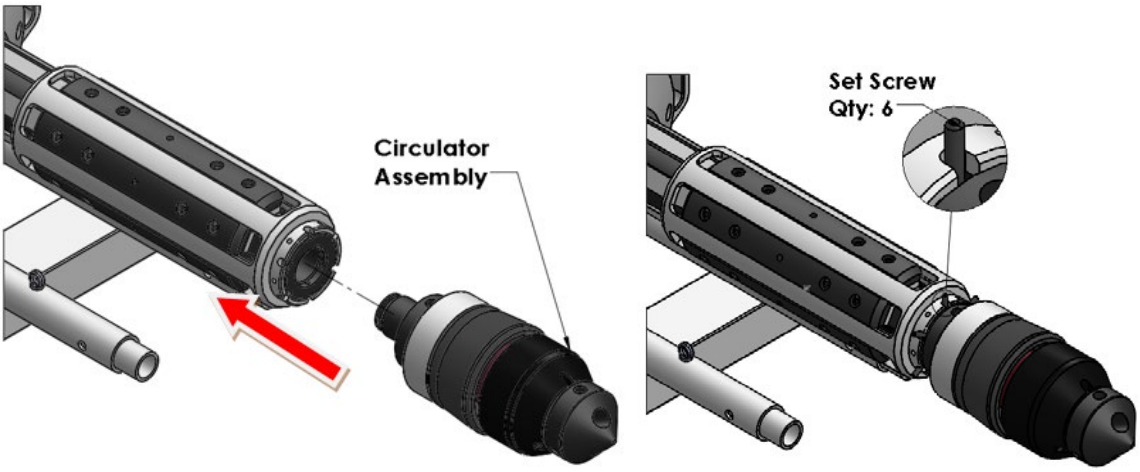

Section 14 - Assembly – Internal Circulator

1. Grease and install an O-Ring in the groove on either end (Qty-2) of the Circulator Body.
2. Slide the Cup Spacer onto the Circulator Body until it shoulders.
3. Grease and insert an O-Ring (if required) into the ID groove on the Thimble.
4. Slide the Thimble (if applicable) onto the Circulator Body so it sits just on top of the Cup Spacer.
5. Insert a greased O-Ring into the ID groove on the Packer Cup and slide the Packer Cup onto the Circulator Body.
6. Slide the Cup Lock Sleeve onto the Circulator Body so it seats into the Packer Cup.
7. Slide the Gage Ring onto the Circulator Body.
8. Grease and thread on the Circulator Nose (the Circulator Nose are left-hand threaded). Tighten with a pipe wrench / spanner wrench to 250 ft-lb.
9. Install (Qty-3) Set Screws in the Circulator Nose's set screw holes.

NOTE: Refer to drawing BOM for appropriate parts list

14.1 4-1/2" to 5" Circulator Assembly

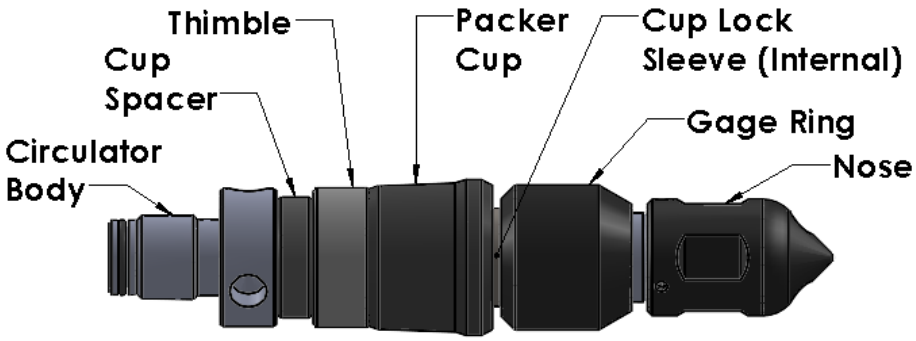

14.2 5-1/2" Circulator Assembly

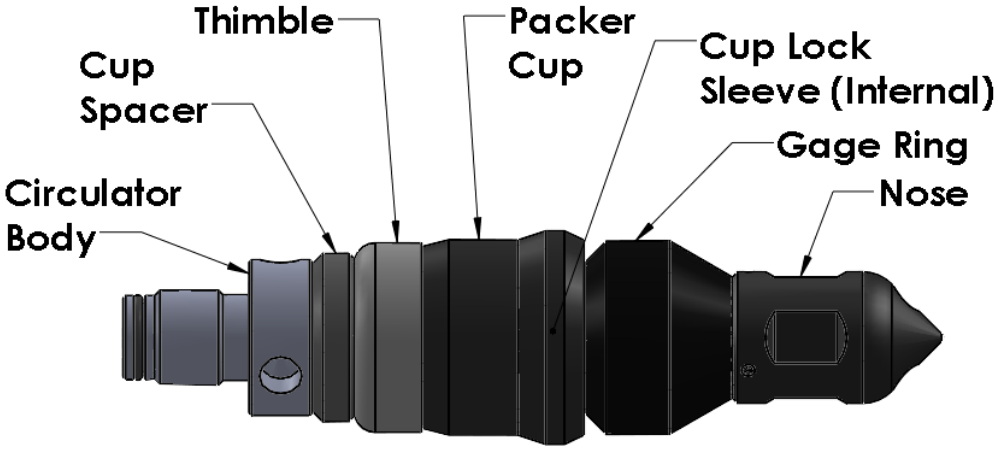

14.3 7” & 7-5/8” Circulator Assembly

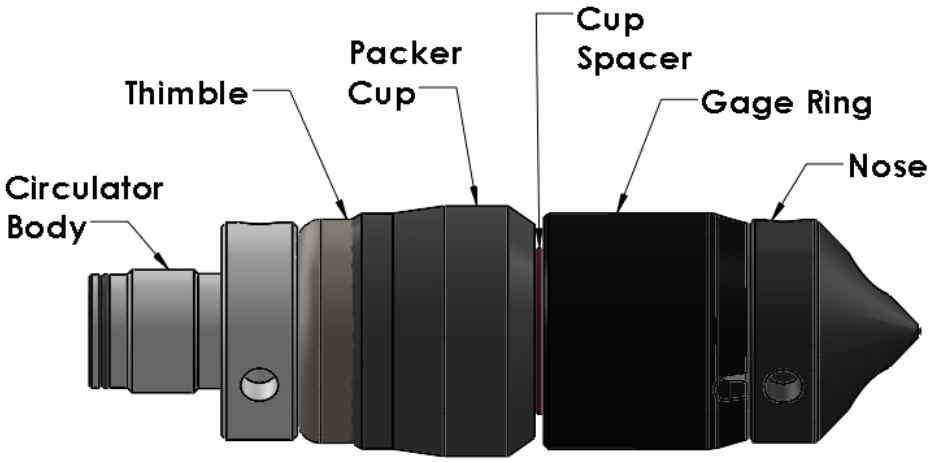

14.4 8-5/8” to 13-3/8” Circulator Assembly

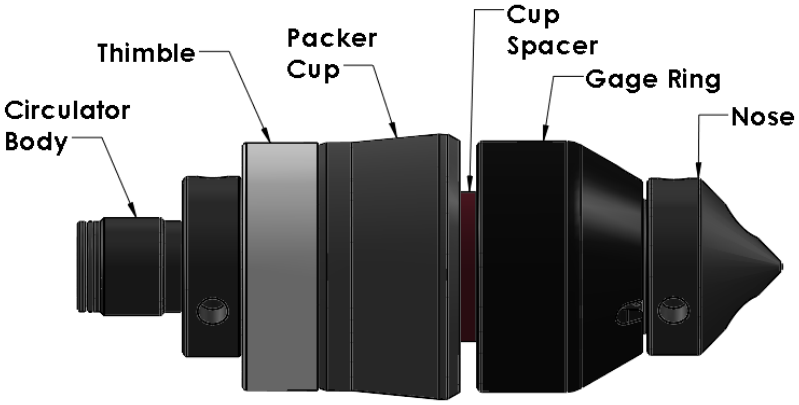

14.5 16”-20” Circulator Assembly

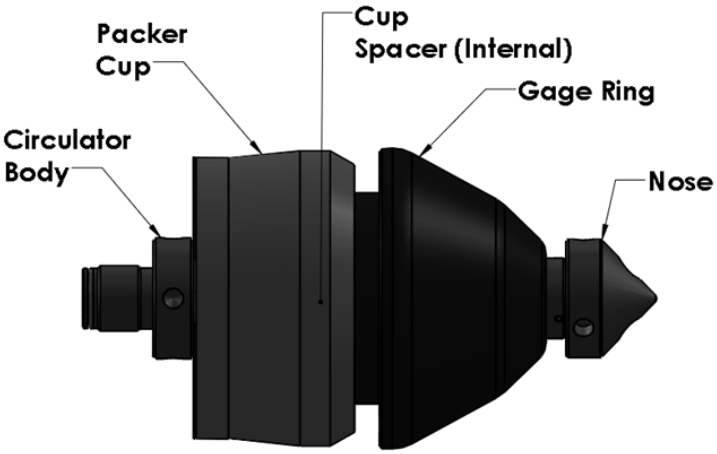

14.6 9-5/8” & 13 3/8” Circulator Assembly (1000 Ton)

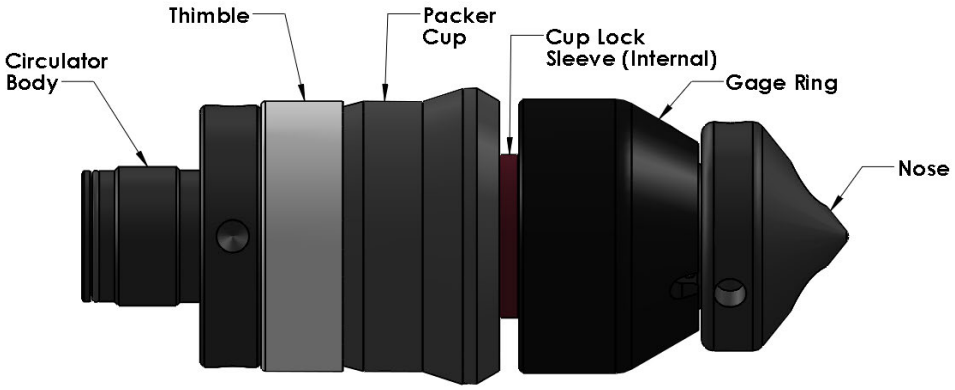

14.7 16”-20” Circulator Assembly (1000 Ton)

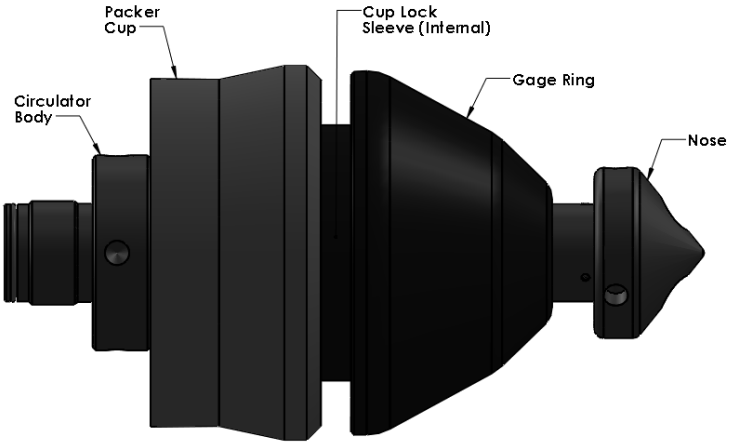

14.8 22”-26” Circulator Assembly (1000 Ton)

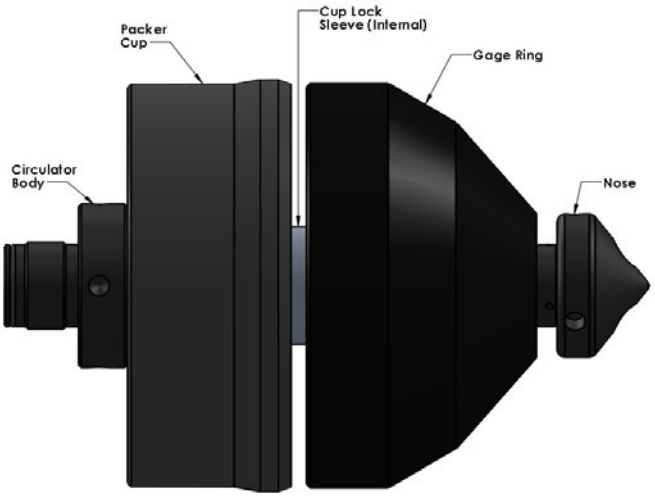

Section 15 - Assembly – External Grip

1. Stand up Lower Housing vertically. Grease the ID and the ID thread.

2. Insert 6 Ramp Segments into Lower Housing. Ensure they are installed in the correct orientation with cut out facing down as shown below.

3. Lift Upper Housing using 2 lifting eyes. Place the Upper Housing onto the Lower Housing. Thread the Upper Housing to the Lower Housing until the Upper Housing shoulders (very lightly).

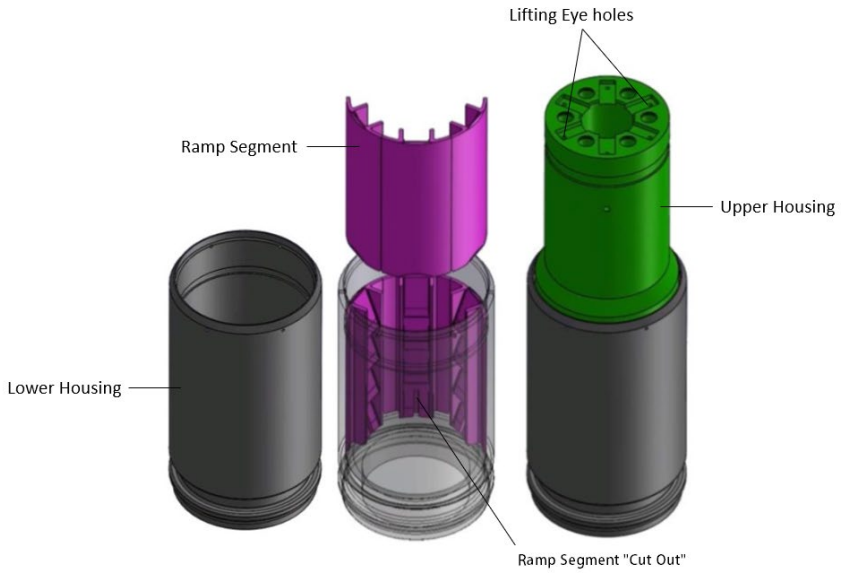

4. Apply anti-seize to and install the 6 set screws into the Lower Housing. The set screws will likely not seat all the way. If the set screws don't fully seat, back off the Upper Housing slowly. Within 15 degrees, the set screws will align over their associated pockets in the Upper Housing. Stop backing-off the Upper Housing and fully set the set screws.

5. Ensure the Mandrel is in the fully "released" position (lugged out on the Mandrel Nut) by rotating the indictor counterclockwise until the Mandrel is in the fully released position. Ensure the Safety Ring and Bump Plate are in place on the Mandrel and that the Bump Plate is oriented correctly. Remove Mandrel thread protector and grease the thread. Thread the Gripping Assembly to the Mandrel and lightly shoulder.

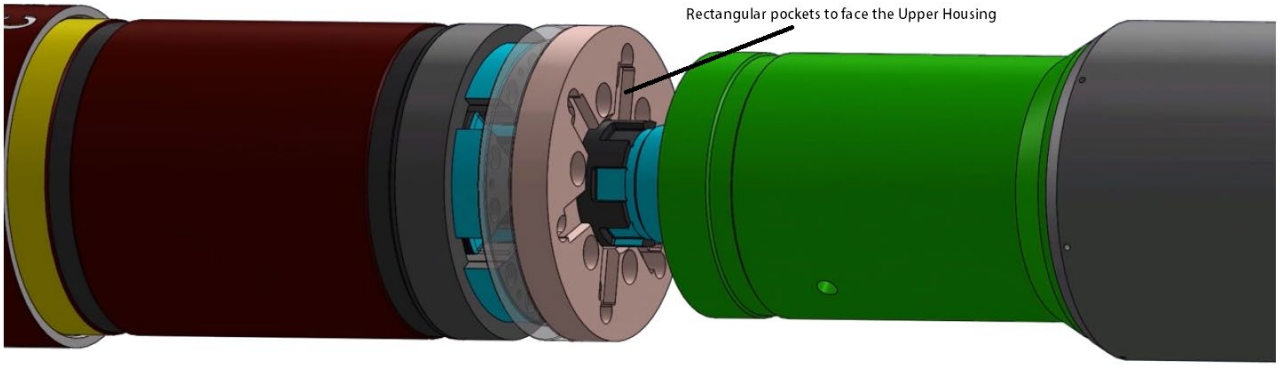

6. Grease Rods and Basket. Insert the Rods into the Basket and secure the Rods with O-Ring (rubber band).

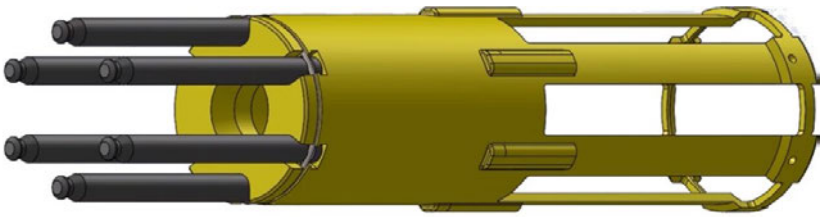

7. The lugs that protrude from the body of the Basket are timed to the Rods. The Rods can't be seen once the Basket is inserted into the Lower Housing. In order to ease the assembly, utilize the Ramp Segment Spinner, a socket extension, and a breaker bar or socket wrench to rotate the ramp segments. Align the holes in the Upper Housing with the cavities formed between each pair of Ramp Segments.

8. Insert Basket Assembly into the Lower Housing.

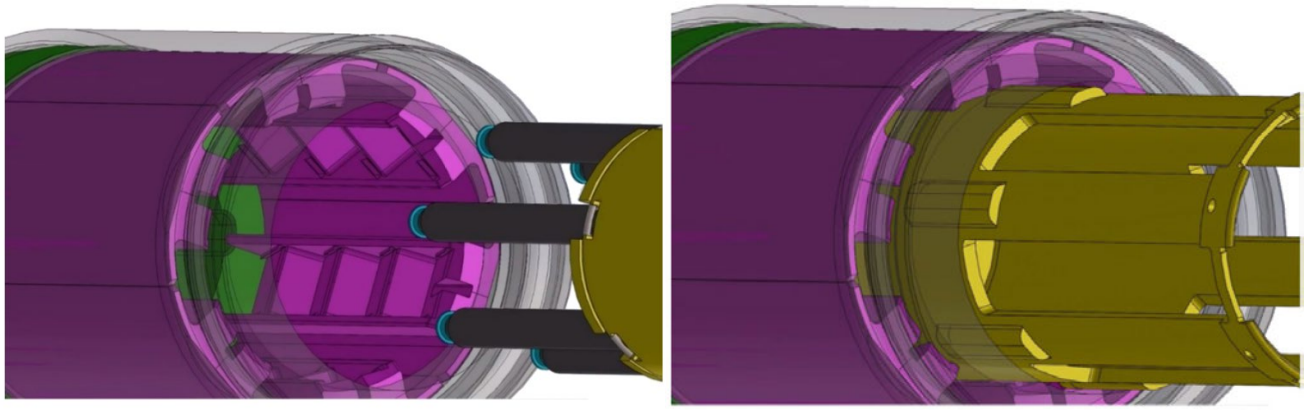

9. Rotate Basket Assembly until the Basket's lugs align with the cavities formed between each pair of Ramp Segments.

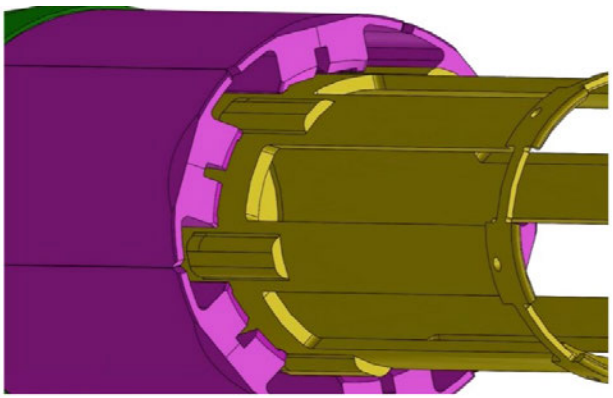

10. Insert the Basket until the Rods meet or slightly protrude from the Upper Housing. If proper alignment wasn't achieved in step 7, the Rods may bottom out inside the Upper Housing. If this occurs, rotate the Basket (and by extension the 6 Ramp Segments as the Ramp Segments are splined to the lugs of the Basket) until the Rods align with the holes in the Upper Housing. Finish inserting the basket into the Upper Housing until the tips of the Rods meet or slightly protrude from the Upper Housing.

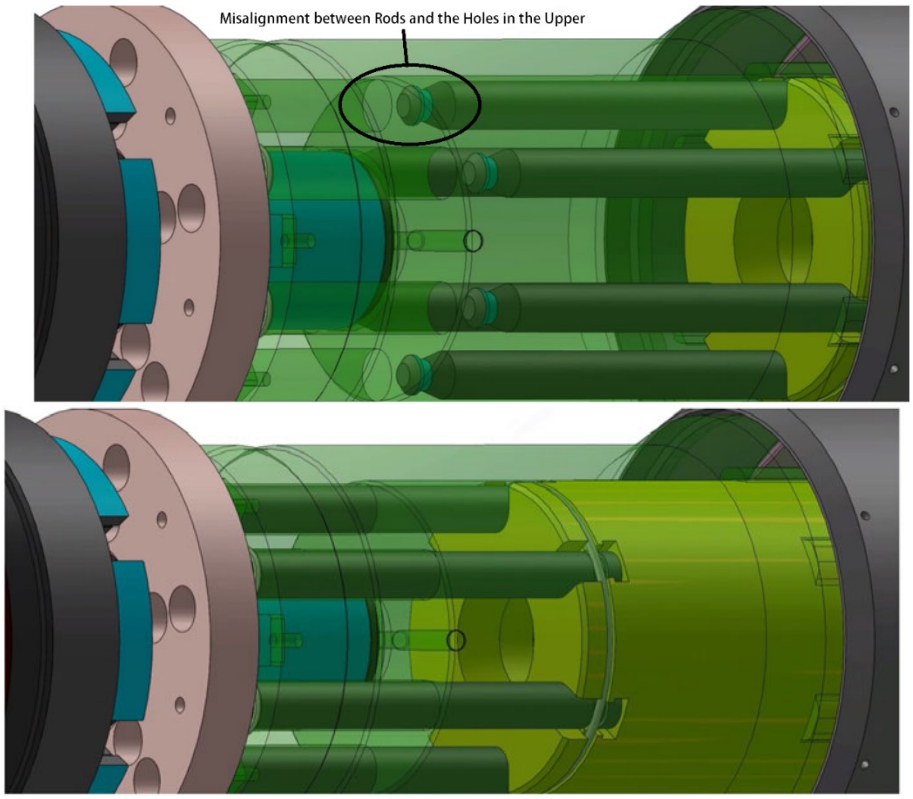

11. Back off the Gripping Assembly from the Mandrel until the Keys can be inserted between the Mandrel and the Upper Housing (up to a sixth revolution). Install the Keys with Nord-lock Washers. A ratcheting box end wrench my ease installation.

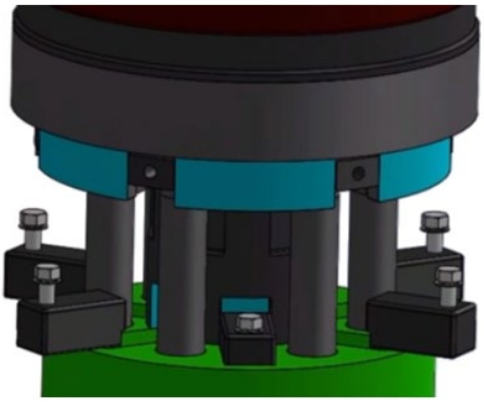

(Bump Plate and Safety Ring not displayed)

12. Insert the Rods into the relief cuts at the bottom of the Housing. The Gripping Assembly may need to be rotated slightly if the Rods don't align with the reliefs.

13. Slide the Safety Ring off of the Housing and onto the rods. Grease and install the 6 Rod Heads. Slide the Safety Ring off of the Rods and back onto the Housing to radially retain the Rod Heads.

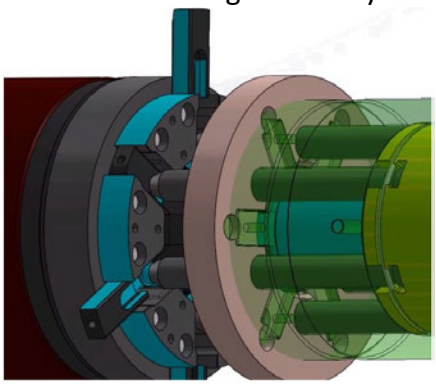

(Safety Ring not shown)

14. Insert the Bump Plate Springs into the Bump Plate. Bolt the bump plate to the Housing with Nord-Locks.

15. Lubricate and install the Slips using the Slip Insertion and Removal Tool. After installing a Slip, retain the Slip with a Magnetic Slip Wedge. Rotate the assembly and repeat for the remaining 5 Slips.

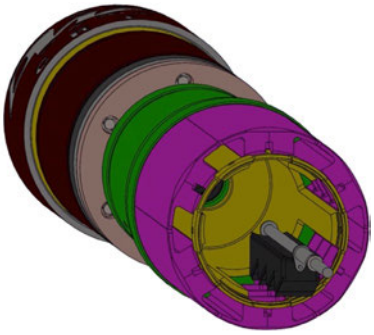

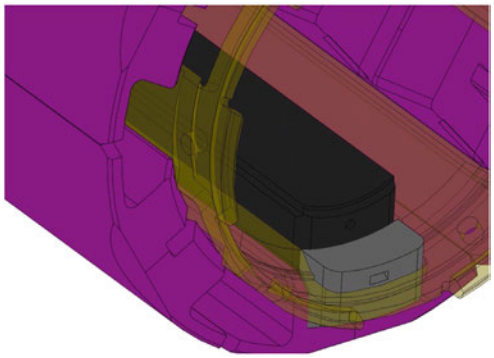

16. Install the 3 Slip Jacks (steel body with plastic ends) between the three sets of opposing Slips. Snug by hand. Warning: Do not remove the Magnetic Slip Wedges without first installing the Slip Jacks or the slips may fall out and cause damage to the slip teeth, the tool, and/or the technician.

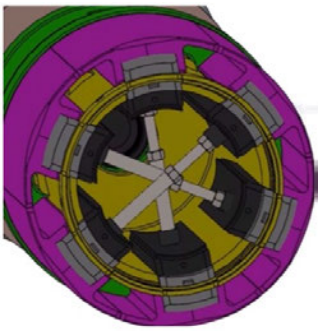

17. Remove the 6 Magnetic Slip Wedges by lightly prying out with a flat head screwdriver.

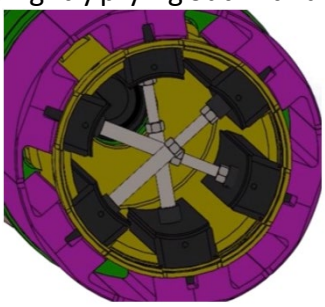

18. Grease and insert the Wear Guide. Firmly seat the Wear Guide to the Basket. Anti-seize the Wear Guide Set Screws. Thread the 6 Set Screws into the Wear guide until they are protruding between 0.015" and 0.050".

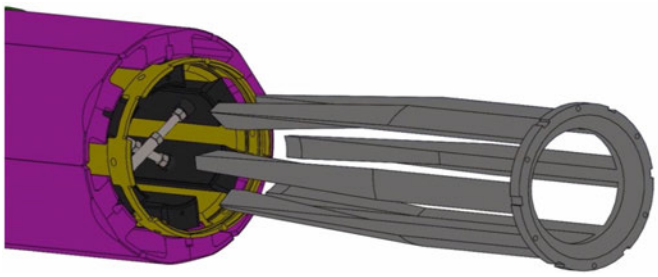

19. Grease the Wear Guide Lock. Insert the Wear Guide Lock into the basket. Rotate the Wear Guide Lock clockwise 15 degrees until the Wear Guide Lock lugs out on the Wear Guide Set Screws. If the Wear Guide Lock does not turn freely in the basket (10 ft-lb max), partially set the tool (rotate the top mandrel in the unlocked position ~20 degrees). Back off the Wear Guide Set Screws into the Wear Guide Lock by inserting an Allen Wrench or Allen Socket through the hole in the Wear Guide Lock.

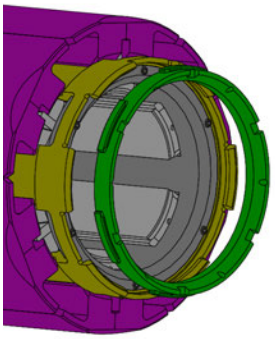

20. Remove the 3 Slip Jacks.

21. Grease Circulator Sleeve.

22. Insert O-Ring and Slide Thimble, Packer Cup, Cup Lock Sleeve, Gauge Ring and Gauge Ring Sleeve onto Circulator Sleeve. This forms a Circulator Cartridge Assembly.

23. Grease and install the two O-rings onto the Circulator Body. Slide the Circulator Cartridge Assembly onto the Circulator Body.

24. Grease Nose Cone. Anti-seize and install the Spring Plunger Set Screw. Thread the Nose Cone onto the Circulator Body until snug. The Spring Plunger Set Screw should ratchet a few clicks just before the Nose Cone is fully seated. Anti-seize and install the three radial Set Screws into the Nose Cone.

Circulator Cartridge Assembly

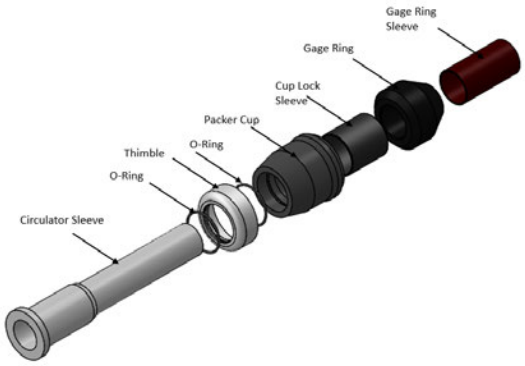

Circulator Assembly

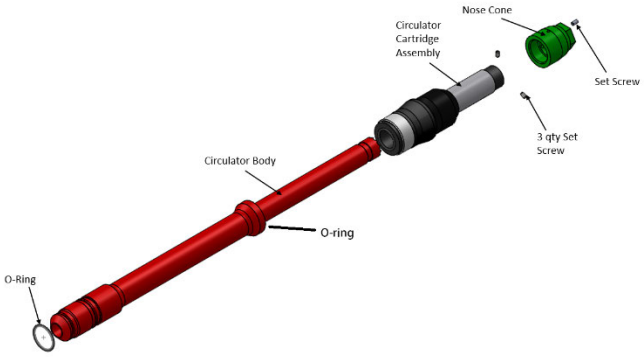

25. **NOTE: A long rod running from the ID of the Mandrel to the bottom of the tool may aid installation of the Circulator Assembly.** Grease the Circulator Body's thread. The Circulator Assembly threads to the Mandrel with right-hand rotation. The nose of the Circulator may need to be lifted and aligned with the through bore when making up the Circulator to reduce the make-up torque. Thread the Circulator Assembly into the Mandrel until it is seated. Install the three Set Screws into the Upper Housing to secure the Circulator to the Mandrel.

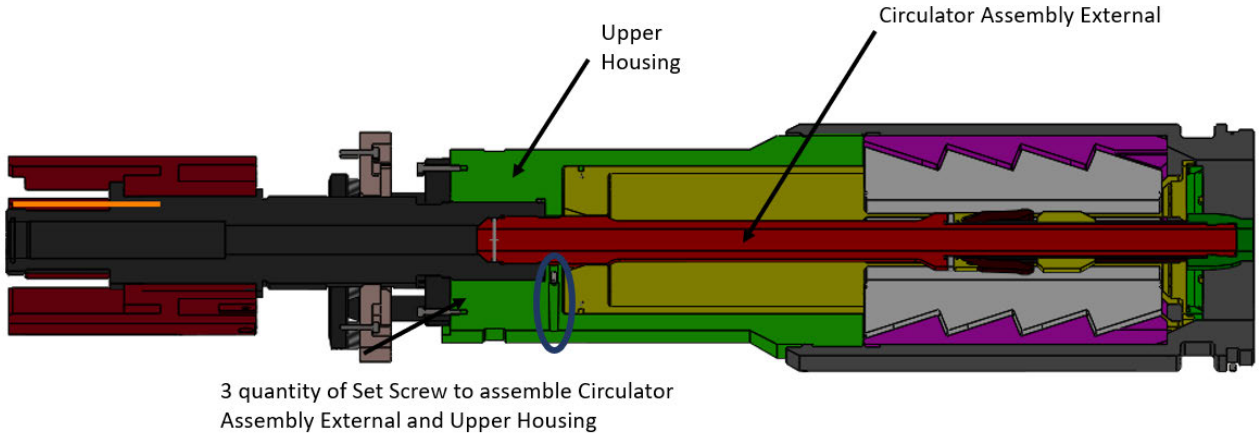

26. Grease the threads of the Bell Guide. Thread the Bell Guide onto the Lower Housing. Snug gently. Anti-seize and install the 6 Set Screws. If the set screws don't line up with the reliefs in the Lower Housing, slowly back off the Bell Guide until the set screws can be fully installed. Fully seat the Set Screws. Install Lower Safety Clamp.

NOTE: Sizes 7" and above utilize a different Bell Guide as described in steps 27, 28 and 29.

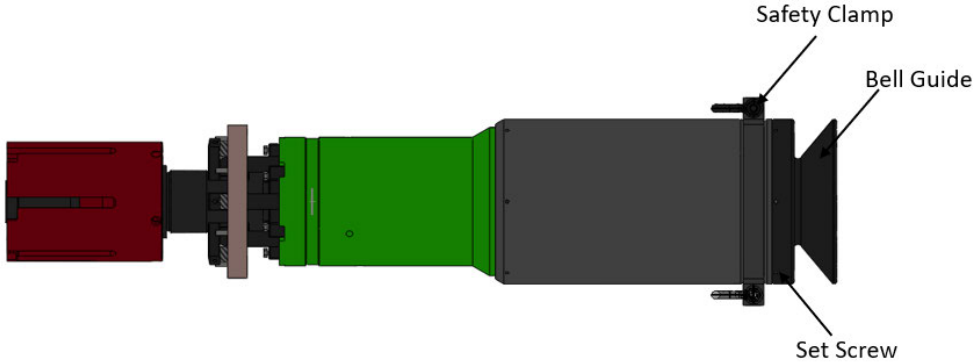

27. Grease and install the Ram Spring on the Ram, followed by the Bump Stop, and pretension bolt. Preload the Ram Assembly by hand (power tools have caused cross threading on previous installations) until the bolts bottom out.

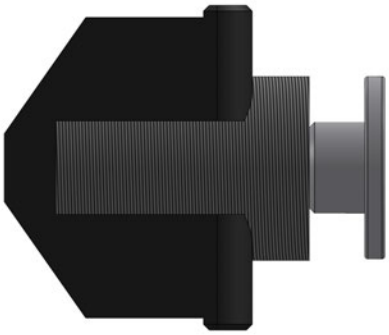

28. Grease and install the 6 preloaded ram assemblies into the Bell Housing. Grease and place the Bell Housing's Top Plate on top of the Ram assemblies. Rotate the Top Plate 1/12th revolution. Anti-seize and bolt the Top Plate to the Bell Housing.

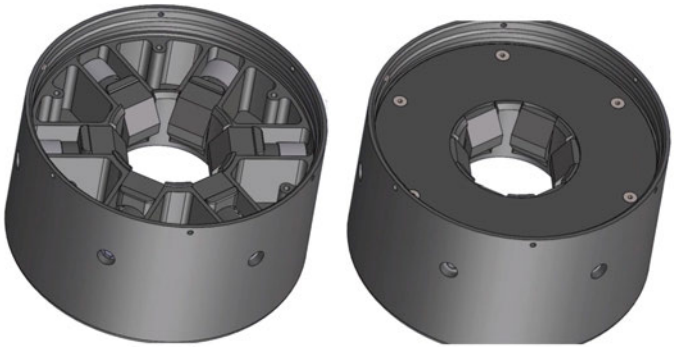

29. Remove the 6 pretension bolts.

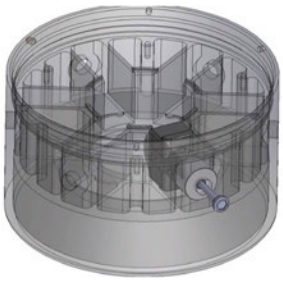

30. Now put the Line on the Indicator and the Housing. First, push the Top Sub and Indicator all the way down. Next, rotate both the Top Sub and the Indicator counterclockwise until the mechanical stop is hit. An audible collision might be heard (a "click"). This should be the fully retracted position of the DWCRT. Two ways to verify that you are fully retracted are: 1) Slips will be below the Wear Guide. 2) Continued rotation will cause the Housing to rotate as well. Use silver duct tape to make a line straight down the side of the Indicator and Housing. Cut tape at Indicator and housing.

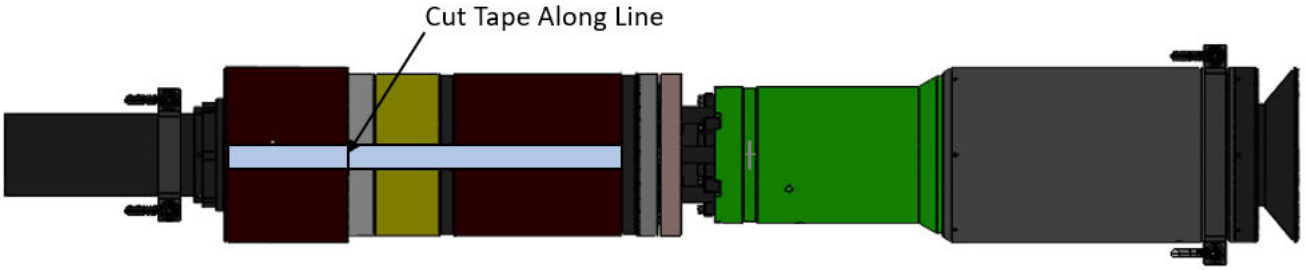

Appendix 1.1: Size and Ratings

DWCRT Internal Specifications													
Tubular Size	Weight Range	Casing ID (in.)	API 8C Hoist Capacity (Tons)	Torque Capacity (ft-lb)	Set Down Weight (Tons)	Pressure (psi)	Min ID (in.)	Flow Rate (bbl/ min)	OAL (in.)	Shorty OAL (in.)	OAL w/ Autovalve (in.)	Shorty OAL w/ Autovalve (in.)	Approx. Weight (lbs.)
4-1/2"	9.5 - 15.1 #	4.090 - 3.826	140	13,000	50	10,000	1	6	103	87	114	98	1300
5"	15 -23.2#	4.408 - 4.044	160	15,000	50	10,000	1	6	103	87	114	98	1300
5-1/2"	15.5 - 26.8#	4.950 - 4.545	225	25,000	50	10,000	1	6	106	90	117	101	1300
5-1/2"	18 - 23 #	4.950 - 4.670	255	25,000	50	10,000	1	6	106	90	117	101	1300
5-1/2"	20 - 23#	4.778 - 4.670	300	30,000	50	10,000	1	6	106	90	117	101	1300
6"	20 -24.5 #	5.352 - 5.125	430	30,000	50	10,000	1	6	108	92	120	104	1500
6-5/8"	20 - 36.7 #	6.049 - 5.501	370	50,000	50	10,000	1	6	115	99	120	104	1500
7"	17 - 35#	6.538 - 6.004	450	65,000	50	10,000	1.5	12	115	99	120	104	1500
7-5/8"	24-42.8#	7.025 - 6.501	450	65,000	50	10,000	1.5	12	115	99	120	104	1500
8-5/8"	24 - 44 #	8.097 - 7.625	450	65,000	50	10,000	1.5	12	115	99	142	126	1500
9-5/8"	36 -59.4 #	8.921 - 8.407	450	65,000	50	10,000	1.5	12	115	99	142	126	1650
9-7/8"	62.8#	8.625	450	65,000	50	10,000	1.5	12	115	99	142	126	1650
10-3/4"	40.5 - 60.7#	10.050 - 9.660	450	65,000	50	10,000	1.5	12	115	99	142	126	1750
10-3/4"	65.7 - 85.3#	9.560 - 9.156	450	65,000	50	10,000	1.5	12	115	99	142	126	1800
11-3/4"	47 - 71#	11.000 - 10.586	450	65,000	50	10,000	1.5	12	115	99	142	126	1875
13-3/8"	54.4 - 85#	12.615 - 12.159	450	65,000	50	10,000	1.5	12	115	99	142	126	2100
13-5/8"	88.2#	12.375	450	65,000	50	10,000	1.5	12	115	99	142	126	2100
16"	65 -109#	15.250 - 14.688	450	65,000	50	10,000	1.5	12	120	104	147	131	2400
16-3/4"	65 - 109#	16.250 - 15.750	450	65,000	50	10,000	1.5	12	120	104	147	131	2400
18-5/8"	87.5 - 117#	17.755 - 17.375	450	65,000	50	10,000	1.5	12	120	104	147	131	2900
20"	94 - 133#	19.124 - 18.730	450	65,000	50	10,000	1.5	12	120	104	147	131	3100

24"	171-216#	22.685 - 22.185	450	50,000	50	10,000	1.5	12	126	110	N/A	N/A	4500
26"	202-275#	24.550 - 24.050	450	50,000	50	10,000	1.5	12	126	110	N/A	N/A	5000

DWCRT External Specifications

Tubular Size	Weight Range	Coupling OD	Coupling Length	API 8C Hoist Capacity (Tons)	Torque Capacity (ft-lb)	Set Down Weight (Tons)	Pressure (psi)	Min ID (in.)	Flow Rate (bbl/min)	OAL (in.)	OAL w/ Autovalve (in.)	Approx. Weight (lbs.)
4-1/2"	17-35#	4.437 - 6.000	15.475	500	65,000	50	10,000	1.5	12	122	N/A	3500
5"	39-55.3#	4.937 - 6.500	15.475	500	65,000	50	10,000	1.5	12	122	N/A	3500
5-1/2"	36 -59.4 #	5.437 - 7.000	15.475	500	65,000	50	10,000	1.5	12	122	N/A	3500
6"	62.8 #	5.937 - 7.500	15.475	500	65,000	50	10,000	1.5	12	122	N/A	3500
7"	40.5 - 60.7#	6.937 - 8.500	15.475	500	65,000	50	10,000	1.5	12	122	N/A	3500
7-5/8"	47 - 71#	7.562 - 9.125	15.475	500	65,000	50	10,000	1.5	12	122	N/A	3500

DWCRT 1K Specifications

Tubular Size	Weight Range	Casing ID (in.)	API 8C Hoist Capacity (Tons)	Torque Capacity (ft-lb)	Set Down Weight (Tons)	Pressure (psi)	Min ID (in.)	Flow Rate (bbl/min)	OAL (in.)	OAL w/ Autovalve (in.)	Approx. Weight (lbs.)
7"	17-35#	6.538 - 6.004	400	60,000	50	10,000	1.5	12	122	137	2950
7-5/8"	39-55.3#	6.625 - 6.125	500	65,000	50	10,000	1.5	12	122	137	3000
9-5/8"	36 -59.4 #	8.921 - 8.407	1000	100,000	50	10,000	2.25	20	130	153	3350
9-7/8"	62.8 #	8.625	1000	100,000	50	10,000	2.25	20	130	153	3350
10-3/4"	40.5 - 60.7#	10.050 - 9.660	1000	100,000	50	10,000	2.25	20	130	153	3580
11-3/4"	47 - 71#	11.000 - 10.586	1000	100,000	50	10,000	2.25	20	130	153	3600
13-3/8"	54.4 - 85#	12.615 - 12.159	1000	100,000	50	10,000	2.25	20	130	153	4000
13-5/8"	88.2#	12.375	1000	100,000	50	10,000	2.25	20	130	153	4000
16"	65 -109#	15.250 - 14.688	1000	100,000	50	10,000	2.25	20	135	162	4400
16-3/4"	65 - 109#	16.250 - 15.750	1000	100,000	50	10,000	2.25	20	135	162	4500
18-5/8"	87.5 - 136#	17.755 - 17.239	1000	100,000	50	10,000	2.25	20	135	162	5050
20"	94 - 133#	19.124 - 18.730	1000	100,000	50	10,000	2.25	20	135	162	5300
20"	163-187#	18.625 - 18.125	1000	100,000	50	10,000	2.25	20	135	162	5350
22"	170-224#	20.438 - 19.938	1000	100,000	50	10,000	2.25	20	138	N/A	5850
24"	171-216#	22.685 - 22.185	1000	100,000	50	10,000	2.25	20	138	N/A	6500
26"	202-275#	24.550 - 24.050	1000	100,000	50	10,000	2.25	20	138	N/A	7100
30"	234#	28.5	1000	100,000	50	10,000	2.25	20	138	N/A	7700

Appendix 1.2: DWCRT Valve Options

Internal (450 Ton)

DWCRT Valve Options			
Tool Size	**Valve**	**Flow Rate**	**OAL Added**
4½" to 20"	C-Series	6 bbl/min	0"
4½" to 5½ "	4-1/2" to 5-1/2" Shorty AutoValve	6 bbl/min	15-1/4"
7" & 7-5/8"	7" & 7-5/8" Shorty AutoValve	12 bbl/min	17"
8-5/8" to 20"	8-5/8" to 20" Shorty AutoValve	12 bbl/min	22"

For the 450 Ton DWCRT we offer a C-SERIES Valve inside of a Crossover Sub which positions the valve for easy removal from job-to-job. In this configuration, a Spacer Sleeve is installed in the Top Mandrel as depicted in step

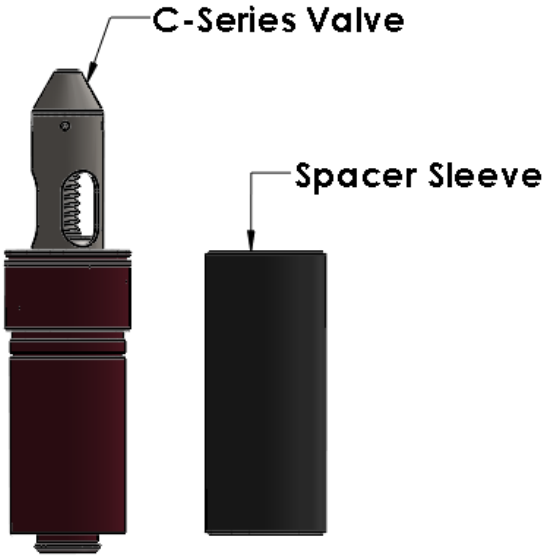

Spacer Sleeve (part# 605113) and C-Series Valve (part# 602870)

Appendix 1.3: Hoisting Capacity Reduction with Pressure

DWCRT Hoist Reduction with Pressure		
Casing Size	**ID (Inches)**	**Tool Hoist Reduction in pounds for every 1 PSI of pressure**
4½"	4.1	13
5"	4.6	17
5½"	5.1	20
7"	6.6	34
7-5/8"	7.1	40
8-5/8"	8.1	52
9-5/8"	9.1	65
10-3/4"	10.2	82
11-3/4"	11.1	97
13-3/8"	12.8	129
13-5/8"	12.4	121
16"	15.3	184
18-5/8"	17.8	249
20”	19.2	290
22"	21.5	363
24"	23.5	433
26"	25.5	510

Effects of Circulation Pressure:

DWCRT hoist capacity is reduced when circulating. The amount of reduction depends on the circulation pressure and the Casing size.

Example: 225-ton Mandrel in 5-1/2” Casing at 4,000 psi = 20 x 4,000 = 80,000 lbs = 40 tons

225 tons - 40 tons = 185 tons

Appendix 1.4: Minimum Set Torque

DWCRT Internal (450 Ton) and External (500 Ton)

Minimum Set Torque before Applying Torque in Locked Position		
DWCRT Mandrel	**Minimum Set Torque**	**Make-Up Torque**
140T 160T 225T 370T 450T 500T	3,500 ft-lb	0 – 9K ft-lb
140T 160T 225T 370T 450T 500T	5,000 ft-lb	10K – 19K ft-lb
225T 370T 450T 500T	10,000 ft-lb	20K – 39K ft-lb
370T 450T 500T	15,000 ft-lb	40K – 65K ft-lb

DWCRT Internal (1000 Ton)

Minimum Set Torque before Applying Torque in Locked Position		
DWCRT Mandrel	**Minimum Set Torque**	**Make-Up Torque**
1000 Ton	4,500 ft-lb	0 – 15K ft-lb
1000 Ton	7,500 ft-lb	15K – 30K ft-lb
1000 Ton	15,000 ft-lb	30K – 60K ft-lb
1000 Ton	25,000 ft-lb	60K – 100K ft-lb

Appendix 1.5: Bolt and Set Screw Torque

Cup Point Set Screw	Tightening Torque (In-lb)
1/4"	94
5/16"	183
3/8"	317
7/16"	502
1/2"	750

Appendix 1.6: Tool Joint Sizes and Make-up Torque

Internal (450 Ton) and External (500 Ton)

Tool Joint Sizes & Makeup Torque		
Tool Joint Size	**Hoist Capacity (Tons)**	**API Make-up Torque (ft-lb)**
4-1/2 IF Box	500	49,000
5-1/2" REG Box	500	50,000
6-5/5 REG Pin	500	50,000
6-5/8" REG Box	500	62,000
5-1/2 FH Pin	500	43,000
5-1/2 FH Box	500	66,000
6-5/8" FH Box	500	35,000
6-5/8" FH Pin	500	35,000
XT-57 Box Pin	500	-
XT-57 Box Box	500	-
XT-65 Box	500	-
XT-65 Box	500	-

Internal (1000 Ton)

Tool Joint Sizes & Makeup Torque		
Tool Joint Size	**Hoist Capacity (Tons)**	**API Make-up Torque (ft-lb)**
6-5/8" FH Box	1000	84,000
6-5/8" REG Box	1000	81,000
7-5/8 REG Box	1000	84,000

McCoy Box Connection is often stronger than the pin connection. The make-up torque and tension rating were calculated using small inner diameters for the pin. The load rating of the connection should be first based on the McCoy rating, then reduced if necessary, depending on the pin that will be connected to the McCoy Tool (and other connections between the DWCRT and TopDrive). Contact McCoy for higher torque requirement options.

Appendix 1.7: Packer Cup, Gage Ring, Thimble Size Chart

The DWCRT family is 10,000 PSI capable but limited to the maximum working pressure of the Packer Cup.

DWCRT Packer Cup Gage Ring Thimble Size Chart								
Casing Size	Weight Range	Gage Ring	OD	Packer Cup	OD	Packer Cup Rated Pressure	Thimble	OD
4-1/2”	9.5/11.6#	601096	4.150"	601107	4.150"	5,000 psi	601114	3.73"
	12.6/13.5#	601097	3.800"	601108	4.070"	5,000 psi	601114	3.73"
	15.10#	601988	3.701"	601927	3.95"	5,000 psi	605276	3.63"
5”	15/18#	601098	4.150"	601109	4.620"	5,000 psi	601115	3.99"
	18/21.4#	601099	3.955"	601110	4.340"	5,000 psi	601115	3.99"
	23.2#	602061	3.785"	602604	4.230"	5,000 psi	601115	3.99"
5-1/2”	13/15.5#	601100	4.820”	601111	5.300"	5,000 psi	601116	4.50"
	17/20#	601101	4.600"	601112	5.090"	5,000 psi	601116	4.50"
	20/23#	601101/601102	4.600"/4.420"	601113	4.980"	5,000 psi	601116	4.50"
	23#	603635	4.545"	603531	4.800"	5,000 psi	605277	4.38"
	23/26#	601102	4.420"	605779	4.800"	5,000 psi	605277	4.38"
	26#	601102	4.420"	602593	4.700"	5,000 psi	605277	4.38"
	26.8#	601098	4.150"	601109	4.620"	5,000 psi	601115	3.99"
6"	20#	603935	5.200"	605047	5.590"	5,000 psi	605048	5.20"
6-5/8"	20/23.2#	605672	5.845"	605674	-	5,000 psi	605556	5.50"
	24/28#	605673	5.666"	603960	6.020"	5,000 psi	605556	5.50"
	32-35#	603940	5.450"	603941	5.850"	5,000 psi	605556	5.50"
7”	17/23#	605074	6.241"	605001	6.740"	5,000 psi	605000	5.91"
	23/26#	605075	6.151"	605002	6.460"	5,000 psi	605000	5.91"
	29/32#	605076	5.969"	605003	6.469"	5,000 psi	605000	5.91"
	35#	605077	5.875"	605012	6.200"	5,000 psi	-	-
7-5/8”	24/26.4#	605078	6.750"	605438	7.150"	5,000 psi	605009	5.91"
	24/29.7#	605078	6.750"	605010	7.150"	5,000 psi	605009	5.91"
	29-33#	605676	6.640"	605437	7.050"	5,000 psi	605009	5.91"
	33.7/42.8#	605079	6.376"	605011	6.876"	5,000 psi	605009	5.91"
8-5/8”	20-24 #	605973	7.972"	602721	8.250"	5,000 psi	605975	7.50"
	28/36#	605092	7.700"	600288	8.150"	4,250 psi	600304	7.50"
	40-44#	605974	7.500"	605977	-	4,250 psi	605976	7.38"
9-5/8”	29/36#	605780	8.765"	601925	9.210"	4,250psi	602205	8.77"
	36/47#	605093	8.379"	601207	9.061"	4,250psi	600305	8.26"
	47/53.5#	605093	8.379"	600290	8.850"	4,250psi	600305	8.26"
	53.5/59.4#	605094	8.250"	605781	8.700"	4,250psi	600305	8.26"
	58.4/71.8#	605782	7.969"	601184	8.700"	4,250psi	605783	Special

9-7/8”	62.8#	605093	8.379"	601207	9.061"	4,250psi	605784	Special
10-3/4”	40.5/60.7#	605095	9.504"	601217	10.220"	3,750 psi	600306	9.51"
11-3/4”	47/71#	605096	10.430"	601208	11.000"	2,000 psi	600307	9.96"
11-7/8”	71.8#	605096	10.430"	601208	11.000"	2,000 psi	600307	9.96
13-3/8”	54.5/85#	605097	12.003"	601212	12.800"	2,000 psi	600308	12.00"
13-5/8”	88.2#	605097	12.003"	601212	12.800"	2,000 psi	600308	12.00"
16”	65/75#	602439	14.936"	601209	15.438"	2,000 psi	N/A	-
	84#	604611	14.800"	601895	15.270"	2,000 psi	N/A	-
	109#	600257	14.500"	600297	15.070"	2,000 psi	N/A	-
18-5/8”	87.5/106#	600634	17.400"	601210	18.020"	1,750 psi	N/A	-
	106/117.5#	603649	17.250"	600299	17.880"	1,750 psi	N/A	-
	123.4 -136 #	603849	16.982"	603958	17.430"	1,750 psi	N/A	-
20”	94/106.5#	600259	18.800"	601211	19.370"	1,500 psi	N/A	-
20”	106-118#	604000	18.740"	603781	19.250"	1,500 psi	N/A	-
20”	118#-133#	605597	18.600"	603782	19.100"	1,500 psi	N/A	-
Sizes Past 20" Are not based on any particular standard or manufacture for determining weight range. Please Verify ID and OD before use								
22	170-224#	605542	19.810"	605502	20.200"	1,000 psi	N/A	-
24	171-216#	605543	22.060"	605503	22.875"	800 psi	N/A	-
26	202-275#	605544	23.900"	605504	24.750"	800 psi	N/A	-

Section 16 - Troubleshooting

16.1 Rigging Up the DWCRT

1. **DWCRT INDICATOR LINES HAVE MOVED PRIOR TO RIG UP AND ARE NO LONGER ALIGNED.**
   - Refer to Section 7 for information related to indicator lines. Compress the Head Assembly into the setting position (yellow window) and rotate by hand in the reverse direction until a hard stop is felt and indicator lines are aligned, verify Slip teeth are sitting below the Wear Guide before proceeding.

NOTE: DO NOT ATTEMPT TO RIG UP THE DWCRT IF THE INDICATOR LINES ARE NOT ALIGNED. SLIPS MAY BE PARTIALLY ACTIVATED CAUSING CLEARANCE ISSUES FOR STABBING INTO CASING.

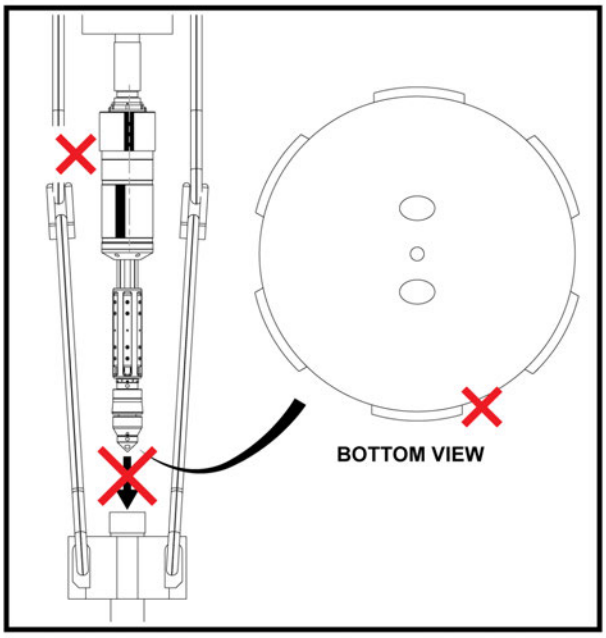

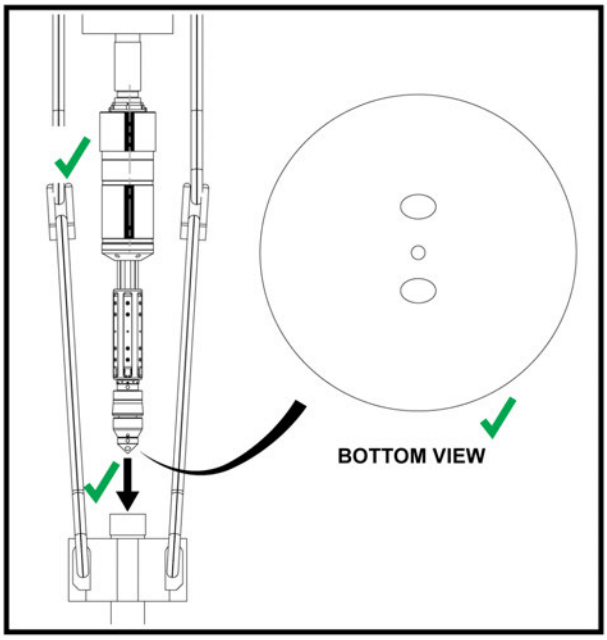

2. **DWCRT WILL NOT FIT INSIDE THE CASING.**
   - Confirm packer cup O.D. compared to casing I.D., verify correct packer cup has been installed.
   - Confirm correct Slips have been installed on the DWCRT.
   - Confirm correct Thimble and Gage Ring have been installed on the Circulator. Verify dimensions with casing I.D.
   - If the Packer Cup is oversized and preventing insertion into casing you may opt to remove the Circulator Assembly, continue rigging up and install Circulator once the DWCRT has been connected to the top drive.
   - Verify the casing weight is in the operation range of the mandrel and wear guides being used (internal).

16.2 Engaging the DWCRT

1. **THE DWCRT ROTATES ON TOP OF THE CASING AND WILL NOT ENGAGE.**
   - Verify the DWCRT is in the Setting Position (yellow window). Apply enough set down weight to create friction between the Bump Plate and the Collar.

- If casing is not aligned with the CRT, moving the bails to adjust the casing position may assist with tool engagement.
    - Set make-up torque to a minimum of 3,500 ft-lb prior to hoisting the string.

NOTE: SETTING DOWN WEIGHT IS ONLY NECESSARY TO CREATE FRICTION ON THE PIPE COLLAR, EXCESSIVE SET DOWN WEIGHT COULD INCREASE FRICTION INSIDE THE DWCRT AND PREVENT ACTIVATION.

NOTE: *REFER TO Appendix 1.4: Minimum Set Torque.*

2. **DURING TOOL ENGAGEMENT THE DWCRT ONLY ROTATES 1/2 TURN BEFORE TORQUE IS OBSERVED AND TOOL STOPS ROTATION.**
    - The DWCRT does not require a large amount weight to be applied when engaging the tool, reduce set down weight and continue rotation.
        - Verify tool has rotated the same number of rotations as observed during the "Stump Test" when the DWCRT was rigged up.
        - If the number of rotations cannot be confirmed, increase torque and observe for additional rotation.

NOTE: Tool engagement verification requires observing both rotation and torque prior to hoisting the string.

16.3 Disengaging the DWCRT

1. **THE DWCRT DOES NOT FULLY DISENGAGE - INDICATOR LINES ARE NOT ALIGNED.**
    - Verify mud pumps are turned off and pressure reads 0. (It is good practice to open the Stand Pipe to bleed pressure).
    - Lower top drive until the yellow window is completely covered. Apply a small amount of set down weight to create friction on the casing collar and rotate in reverse.

    NOTE: SETTING DOWN WEIGHT IS ONLY NECESSARY TO CREATE FRICTION ON THE PIPE COLLAR, EXCESSIVE SET DOWN WEIGHT COULD INCREASE FRICTION INSIDE THE DWCRT AND PREVENT ROTATION.

2. **THE DWCRT IS FULLY DISENGAGED AND STARTS TO COME OUT OF THE CASING WITHOUT HOISTING.**
    - Verify mud pumps are turned off and pressure reads 0. (It is good practice to open the Stand Pipe to bleed pressure).
    - Fluid pressure against the packer cup can have enough force to lift the DWCRT if the Slips are not engaged and fluid pressure is present.

NOTE: BLEED OFF THE STAND PIPE PRESSURE AND CONFIRM A ZERO READING ON THE GAUGES PRIOR TO DISENGAGING THE DWCRT.

3. **DWCRT INDICATOR LINES HAVE MOVED AND ARE NO LONGER LINED UP – WHILE RIGGED INTO TOP DRIVE AND DWCRT IS OUTSIDE OF CASING.**
    - The Housing needs to be held and the tool put in the Setting Position (yellow window).
    - Place a soft sling under the Bump Plate and lift with air hoist until the DWCRT is in the Setting Position (yellow window). Grip the Housing above the Bump Plate with a chain tong and rotate by hand in the clockwise direction until the indicator lines are aligned.

NOTE: ENSURE THE DRILLER HAS LOCKED OUT THE TOP DRIVE PRIOR TO PERFORMING ANY WORK ON THE DWCRT WHILE RIGGED IN.

4. **WHILE REMOVING THE DWCRT FROM THE CASING THE SLIPS SNAG OR LIFT THE CASING.**
    - Immediately Stop Lifting!

- If there are only 1-2 joints of casing in the hole the packer cup may have enough friction to hoist the string.
    - Hoist slowly and monitor for casing movement. Lubricate the packer cup seal prior to inserting into the next joint of casing.
- If string weight is sufficient and Slips snag on the casing, lower DWCRT back into the pipe, confirm indicator lines are aligned by rotating in reverse with the tool in the Setting Position (yellow window).
    - Hoist slowly and monitor for casing movement.
    - Inspect the Slip Head for damage once removed from the casing.

NOTE: CONTACT THE MCCOY TEAM IF YOU ARE UNSURE OF HOW TO INSPECT FOR DAMAGE.

5. **EXCESSIVE SET DOWN (TOP DRIVE) WEIGHT NECESSARY TO PLACE THE DWCRT INTO THE SETTING POSITION (YELLOW WINDOW).**
    - The internal seals on the Snorkel may be leaking, which could allow fluid to enter the Housing.
        - Fluid needs to be displaced by slowly applying down force with the top drive and letting the fluid bleed off between the Head and the Housing. Once the tool can be placed in the Setting Position (yellow window), rotate in reverse until Indicator lines are aligned.

NOTE: CONTACT THE MCCOY TEAM IF YOU ARE UNSURE OF HOW TO INSPECT FOR DAMAGE.

6. **WHEN ATTEMPTING TO RELEASE THE TORQUE SET IN THE DWCRT, THE TOOL JOINT CONNECTION BREAKS**
    - If available, lower the grabber box over the tool joint connection and torque to a minimum of 1.25 times the make-up torque.
    - If a grabber box is not available and manual tongs cannot be used as back-up on the DWCRT tool joint, follow the instructions below.
        - With the DWCRT placed in the Setting Position (yellow window), rotate in the forward direction until the tool joint shoulders, apply a minimum of 3,500 ft-lb of torque.
        - Allow DWCRT to move into the Locked Position (white window) by slowly hoisting. Place back-ups on the casing and torque through the DWCRT until desired tool joint torque is achieved.
        - Place DWCRT in the Setting Position (yellow window) and release the initial setting torque of 3,500 ft-lb.

NOTE: ADDITIONAL TORQUEING OF THE TOP DRIVE TOOL JOINT MUST BE DONE IN THE LOCKED POSITION (WHITE WINDOW) TO AVOID OVER TORQUEING THE DWCRT.

16.4 Backing Out Casing with the DWCRT

1. **HIGH TORQUE CASING CONNECTION NEEDS TO BE "BROKEN-OUT" – DWCRT DRESSED WITH 140 - 450T MANDREL**
   - With the Housing in the Locked Position (white window), apply sufficient reverse torque to break the casing connection. ***REFER TO APPENDIX 1.1: SIZE AND RATINGS FOR RECOMMENDED TORQUES.***
     - Once the make-up torque has released from the casing connection (approximately 1 full rotation), stop rotation.
     - Apply manual tong on casing collar and release DWCRT from the casing and immediately re-torque to 3,500 ft-lb.
     - Place DWCRT into the Locked Position (white window) by slowly hoisting. Continue backing out threaded connection and follow procedure for "Backing Out Casing".

2. **HIGH TORQUE CASING CONNECTION NEEDS TO BE "BROKEN-OUT" – DWCRT DRESSED WITH 1000T MANDREL**
   - With the Housing in the Locked Position (white window), apply sufficient reverse torque to break the casing connection.
     - Once the make-up torque has released from the casing connection (approximately 1 full rotation), stop rotation.
     - Apply manual tong on casing collar and release DWCRT from the casing and immediately re-torque to 3,500 ft-lb.
     - Place DWCRT into the Locked Position (white window) by slowly hoisting. Continue backing out threaded connection and follow procedure for "Backing Out Casing".

Section 17 - Customer Feedback Form

www.mccoyglobal.com
Email: sales@mccoyglobal.com

Thank you for choosing a DWCRT. Your honest feedback will help us to serve you better and enable us to work on improving our product standards. Thank you.

Name	
Organization	
Address	
Email	
Phone	
Product	
Date:	location:

Suggestion and Comment for the Product:

	Yes	No
1. Product was easy to assemble	☐	☐
2. Product came with all required tools	☐	☐
3. Product included user manual	☐	☐
4. Customer support were responsive	☐	☐